Reference Guide for DS7400Control/Communicator

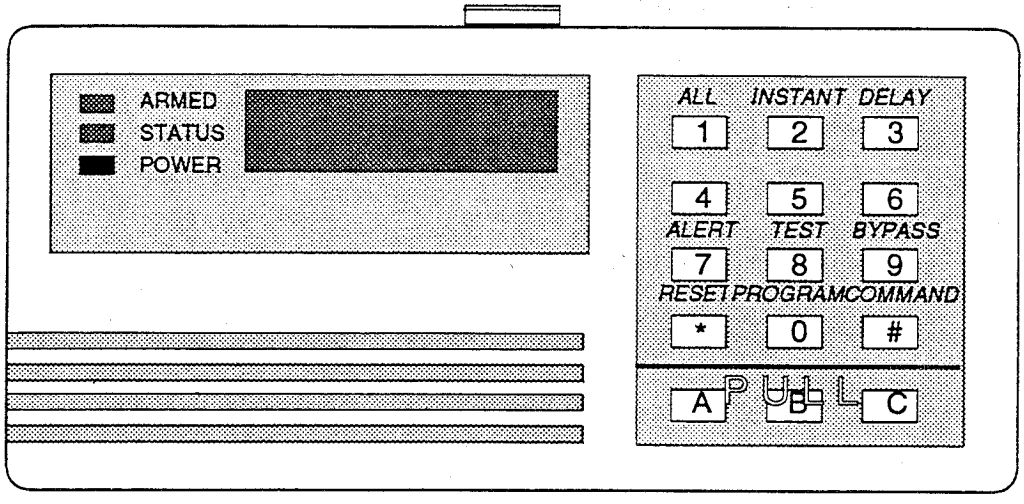

Keypad Quick Reference Guide

Turning On (arming) your System

Turn on all protection	PIN + COMMAND 1
Occupied, no entry allowed	PIN + COMMAND 2
Occupied, entry allowed	PIN + COMMAND 3
Turn on all protection, no entry allowed	PIN + COMMAND 5

Custom Arming PIN + COMMAND 4 for _____

Force Arming Enter arming command above followed by 9

Area Bypass PIN + COMMAND 9 followed by the Point number

Turning Off (disarming) your System

Enter your **PIN** followed by COMMAND

Commands for other System Features

Alert Mode	PIN + COMMAND 7
Area Test	PIN + COMMAND 8 1
Read History	PIN + COMMAND 8 9
Battery Test	PIN + COMMAND 8 0
Communicator Test	PIN + COMMAND 8 2
Fire Reset	PIN + COMMAND 8 0
Remote Program Dial out	PIN + COMMAND 8 3
Remote Program Answer	PIN + COMMAND 8 6
Sounder Test (alarm sounding devices)	PIN + COMMAND 8 5
Trouble Display	PIN + COMMAND 8 7
Trouble Display Reset	PIN + COMMAND 8 7 *

Access Control

Enter your **Access Control PIN** followed by COMMAND

Detection Systems, Inc., Fairport, New York 14450
Technical Service: (800) DSI-7454
Sales: (800) 289-0096 and (716) 223-4060
Fax: (716) 223-9180

Copyright © 1993 Detection Systems, Inc.

DS7400 Installation Installations -- Table of Contents

Cover

Table of Contents 2

Specifications 4

Installing the Enclosure 5

Control Terminal Wiring 6

System Overview 7
- Description 7
- Point 7
- Point Type 7

Glossary 7
- Point Type Programming 7
  - Invisible Alarms 7
  - Silent Alarms 7
  - Bypassing Allowed 7
  - Alarm on Short 7
  - Alarm on Open 7
  - Trouble on Open 7
  - Perimeter Instant 7
  - 24 Hour 7
  - Entry/Exit Delay #1 7
  - Entry/Exit Delay #2 7
  - Interior Entry/Exit Follower 7
  - Interior Home/Away 7
  - Interior Instant 7
  - Day Monitor 7
  - Key Switch Input 8
  - Fire Point 8
  - Fire Point with Verification 8
  - Water Flow Point 8
  - Supervisory 8
- Output Programming 8
  - Point Alarm (Latching) 8
  - ON during Entry Pre-Alert 8
  - ON for 10 Sec. after #80 is entered 8
  - ON when System is Armed 8
  - Ground Start 8
  - System Status (ready to arm) 8
  - Point Alarm 8
  - Point Alarm Delayed by 10 sec. 8
  - Keypad Sounder Output 8
  - Access Output 8
- General Control Programming 9
  - Commercial Mode 9
  - Level 1 Arming 9
  - Level 2 Arming 9
  - Level 3 Arming 9
  - Level 4 Arming 9
  - Level 5 Arming 9
  - Level 6 Arming 9
  - Closing Ring-Back 9
  - Siren on Comm. Fail for Silent Point 9
- General Control Programming (continued)
  - Restore when Sounders Silence 9
  - Restore when Point Restores 9
  - Restore when System is Disarmed 9
  - Allow Swinger Shunts 9
- Partition Control Programming 9
  - Partition Control Programming 9
  - Common Area 9
- Keypad Assignment Programming 9
  - Keypad Assignment 9
  - Master Keypad Programming 9
- Point Assignment Programming 10
  - Single Point Input 10
  - 8-Input Module or Dual Input Remote 10
- Emergency Key Programming 10
  - Fire Key 10
  - Special Emergency Key 10
  - Panic Key 10
- Key 4 Arming Programming 10
  - Key 4 10
- Open/Close Report Control Programming 10
  - Open and Close Reports 10
  - Send Trouble at Close for Bypassed Points 10
  - Alternate between both Phone Numbers 10
- Phone Number General Control Programming 10
  - Enable Remote Programmer Callback 10
  - Dial Pulse on all Phone Numbers 10
  - Dial Tone on all Phone Numbers 10
- Phone Answering Programming 10
  - Phone Answering Programming 10
  - Answering Machine Bypass 10
- Force Arming Programming 11
  - Force Arming 11
- Report Programming 11
  - Reports 11
- Octal Relay Module (DS7488) Programming 11
  - Octal Relay Module 11
- FCC Compliance Notice 11
- FCC Phone Connection Notice to Users 11
- Canadian Dept. of Communications 12
  - General Installation Requirements 12
  - Terminal requirements 12
  - RFI Requirements 12

Operating the DS7400 13
- Turning ON (arming) the System 13
- Turning OFF (disarming) the System 13
- Turning OFF (disarming) the System under Duress 14

 Copyright © 1993

DS7400 Installation Installations -- Table of Contents

Operating the DS7400 (continued)
Emergency Keypad Alarms 14
Keypad Displays 15
Error Displays 15
Access Control 16
Chime Mode 16
Area Bypass 17
Force Arming 17
Fire Reset/Fire Trouble 18
Fire Safety 19
Personal Identification Numbers 20
Changing the Date 21
Changing the Expiration Date (for Temp. Codes) 21
Changing the Time 21
Testing 22

The Master Keypad 23
Master Keypad Displays 23
Arming and Disarming with the Master Keypad 23
Single Partition Mode 23

Programming the DS7400 24
How to Program the DS7400 24
Understanding the Programming Charts 25
Point Type Programming 26
Output Programming 27
General Control programming 27
Partition Control programming 28
Keypad Assignment Programming 28
Point Assignment Programming 29
Alpha Description Programming 30
Alpha Word Programming 31
Custom Word Programming 32
Emergency Key Programming 33
Panic Key Programming 34
Key 4 Arming Programming 34
Open/Close Report Control Programming 35
Report Control Programming 35
Phone Number General Control Programming 36
Phone Answering Programming 36
Force Arming Programming 37
Timer Programming 37
Report Programming 38
Phone Number Format Programming 43
Account Code programming 44
Programmer's Code Programming 45
Master Code Programming 46
Octal Relay Module Output Programming 47
Call-Out Timer Programming 48
Test Report and Remote Programmer Call-Out Programming 49
Phone Number 1 Programming 50
Phone Number 2 Programming 50
Phone Number 3 Programming 50

DS7400 Installation Guide for U.L. Certificated Installations 51

Programming Addresses 55

 Copyright © 1993

DS7400 Specifications

Housing

The standard enclosure is manufactured from 20 Ga., cold-rolled steel, and measures 12.5 in. Wide, by 14.5 in. High, by 3 in. Deep. A keyed lock is included, and this enclosure has provision for an optional tamper switch for monitoring the door.

Temperature

- +32° to +120°F
  (0° to +49°C)

Power

• Input power	18 VAC, 50 VA, 60 Hz.
• Auxiliary regulated power	12 VDC, 1.5 A.
• UL Listed Auxiliary power	12 VDC, 1.5 A.
• UL Listed Alarm Power Output	1.0A.
• Auxiliary power voltage range	7.0 to 34.0 VDC
• Optional Standby battery	12 V, 7.0 AH
• Control panel standby current	125 mA
• 7440 keypad standby current	75 mA.

4 5/8" H, 4 7/8" W, 1" D

NOTE: Total current for all auxiliary devices, including keypads and smoke detectors, is 1.5A standby and 2.5 Amps in alarm (2.5 Amps UL burglar and 2.5A for UL Household Fire).

Outputs

• Alarm Output	Form A, 1.0 Amp contact connected to auxiliary power. Can be programmed for steady or pulsed output.
• Programmable Output 1	Solid state current sink (40 mA Max.). Can be used for alarm, arming state, or access control. This output is generally programmable.
• Programmable Output 2	Solid state voltage source(500 mA Max.). Can be used for alarm, arming state, or access control. This output is generally programmable.

Keypads

• Number of keypads	8 Keypads
• Maximum wire length each	1000 feet
• Maximum wire length total in system	6000 feet
• Wire type	4 conductor #22 AWG "Telephone quad"

NOTE: no more than 3 keypads on any 1000 foot run

Communicator

Will report to two phone numbers with full single, double and back-up reporting. Communicates in SIA, 3/1, 3/1 Ext., 4/1, 4/2, BFSK, and Contact ID.

FCC Registration Number is ESVUSA-75333-AL-E
The ringer equivalence is 0.1B

Lightning Protection

MOVs and spark gaps provide protection from lightning surges and static discharges.

Burglar/Fire Zone Inputs

• Number of circuits	8 Circuits on board
• End of line resistor	2.21k ohms

Fire Signal Initiating Circuit (2 wire mode)

Fire circuit will work with 2 or 4-wire detectors and has optional alarm verification.

• Number of circuits	8 Circuits
• Type of circuit	Class B, latching
• End of line resistor	2.21k ohms
• Supervisory current	5 mA.
• Minimum current for alarm	12 mA.
• Maximum short circuit current	22 mA.
• Maximum circuit resistance	60 ohms
• Circuit voltage range	8.5 to 14.1VDC
• Maximum impedance for alarm	1000 ohms
• Maximum detectors per zone	20 detectors (2 wire)
• Total detector standby current	2.5 mA.

Copyright © 1993

DS7400 Enclosure Installation

The DS7400 control/communicator and the enclosure are shipped in separate boxes. Hardware for mounting the enclosure to a wall, and the control to the enclosure is located in a separate hardware pack.

1.0 Install the Enclosure

- Use the enclosure as a template and mark the top mounting holes on the mounting surface.
- Pre-start the mounting screws for these two holes. Slide the enclosure onto these mounting screws so that the screws move up into the thinner section of the holes. Tighten the screws.
- Screw in the remaining two screws in either set of bottom mounting holes.
- Knock out the desired wire entrances on the enclosure.

2.0 Install the Control/Communicator

CAUTION: The control is static sensitive. Make sure you touch ground before handling the control. This will discharge any static electricity in your body. Example: Run the ground wire to the enclosure before handling the control. Then keep holding the ground wire while installing the control.

- Insert the three support posts into the control retainer holes as shown in the diagram.
- Slide the top of the control into the retainer tabs (the slots under the top frame).
- Once in the retainer tabs, the control will rest on the three support posts.
- Secure the bottom of the enclosure by screwing the bottom three holes through the support posts and through to the control retainer holes.

CAUTION: Once the control is installed, be sure to connect its ground wire to the top hinge of the enclosure (the unpainted tab).

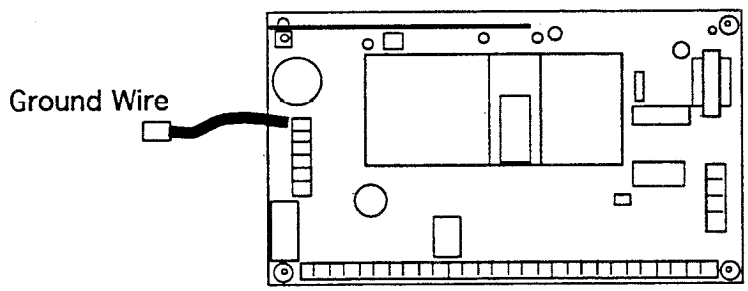

Control/Communicator

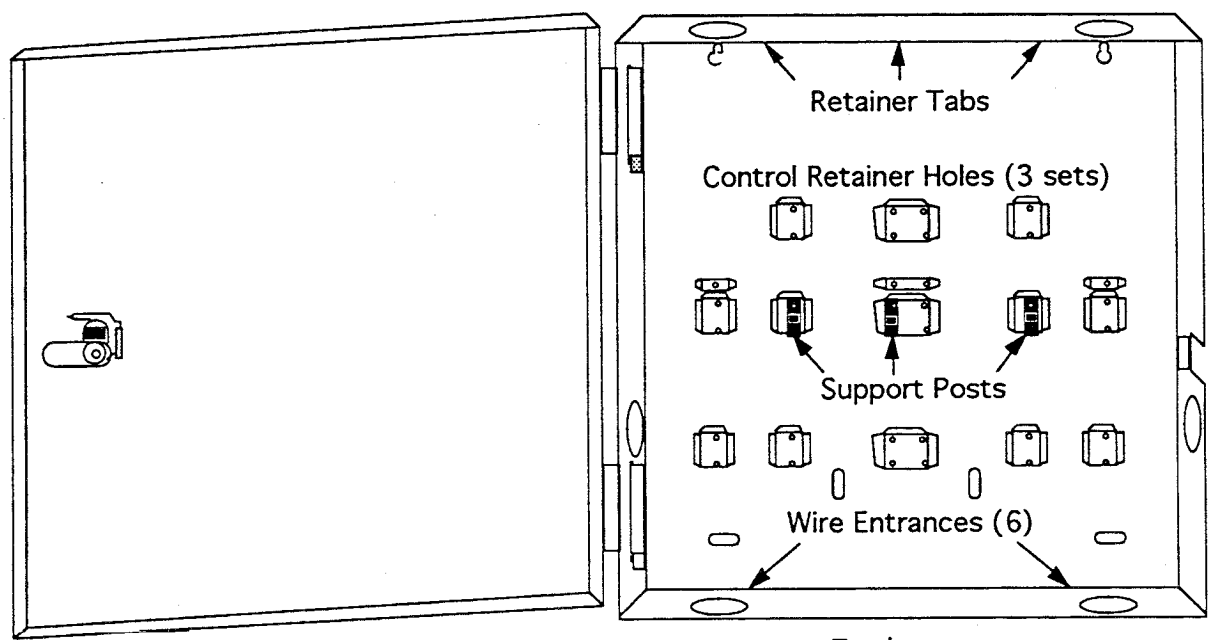

Enclosure

Copyright © 1993

DS7400 Control Terminal Wiring

WARNING: Before servicing this equipment, remove all power including the transformer and battery and also remove the phone line connection.

CAUTION: Incorrect connections may result in damage to the unit

A/CPower Indication LED

1, 2	⏚	**EARTH GROUND:** Must be connected to a good earth ground such as a cold water pipe and also connected to the cabinet cover, using the supplied wire jumper.
3, 4	A C	**A/C INPUT:** Use a listed Class 2,18VAC 50VA transformer such as a Basler Electric BE116350CAA. Transformer must be dedicated to the DS7400 and connected to an un-switched output.
5, 6	– A	**ALARM OUTPUT:** Provides 12 VDC, up to 2A for powering bells, siren drivers, etc. Function programmed in address 0008
7, 8	– +	**AUXILIARY POWER:** Provides 12 VDC, up to 1.5A for powering detectors.

R B G Y	OPTION	**OPTION BUS:** Used for options such as DS7420 Dual* Phone Line Monitor, DS7488 Octal Relay* Module, 3100-0200, etc.. * = Not UL Listed

KEYPAD: Up to 8 keypads may be used.				PHONE LINE:			
R	B	G	Y	B	G	R	S
9	10	11	12	13	14	15	16

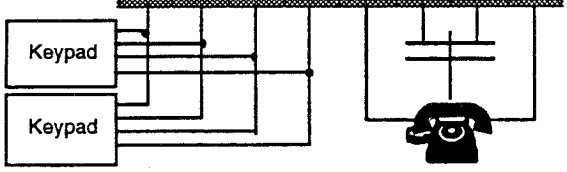

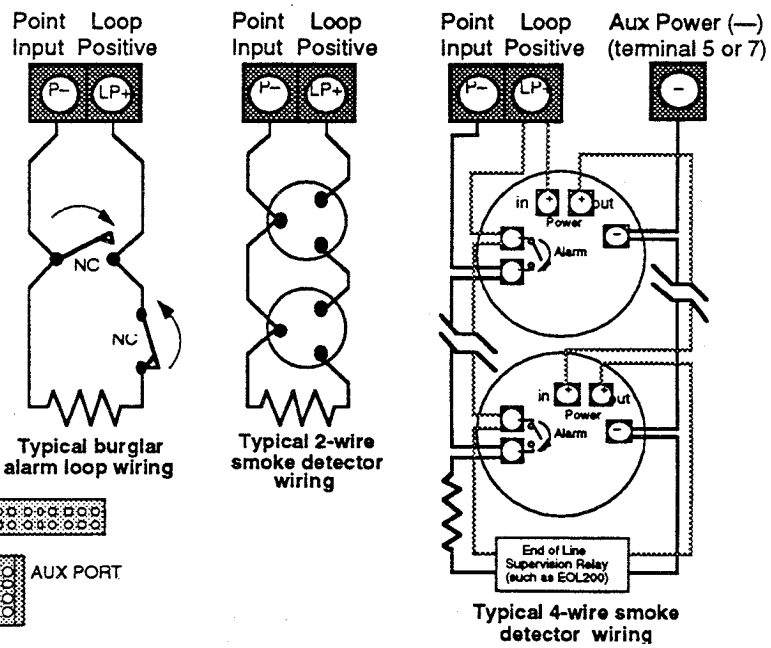

PROGRAMMABLE OUTPUTS:
PO1 shorts to ground when activated, PO1 can sink up to 40mA-
PO1 function programmed in address 0009.

PO2 supplies 12V and up to 500mA when activated -
PO2 function programmed in address 0010

POINTS 1-8:
Points 1-8 are intended for connection of normally open or normally closed alarm contacts. They may also be used for compatible 2-wire smoke detectors (up to 20 2-wire smoke detectors per loop). These points require a 2.21KΩ resistor (P/N 25899) at the end of the loop. Point 1-8 functions are programmed in address 0022-0029.

PO1	PO2	1–	LP+	2–	3–	LP+	4–	5–	LP+	6–	7–	LP+	8–
17	18	19	20	21	22	23	24	25	26	27	28	29	30

 Copyright © 1993

System Overview

- **Description:** The DS7400 Control/Communicator is a fully integrated hardwire/multiplex security/residential fire alarm system. It can support up to 64 input points, 60 individual users, and multiple output options. It can be partitioned into as many as four separate systems, thus allowing individual control and reports for each partition. Up to 8 keypads may be used to provide user interface with the system, as well as programming access for the installer.

- **Point:** A Point is an input to the DS7400 Control/Communicator. There are 8 hardwired points on the main circuit board. Additional points may be added by using the DS7433 (8 point expansion module), or by adding the DS7430 (multiplex loop module).

- **Point Type:** A Point Type is the description of how a particular point will function. Up to 8 different point types are allowed per system. These specific functions are programmed into each point; each point must be programmed as a specific point type. Any number and combination of points may be programmed as particular point types.

Glossary

Point Type Programming

- **Invisible Alarms:** This is a point programmed **not** to have an alarm output or an alarm display at the keypad when activated. There will be an alarm signal sent, but the keypad will display "Not Ready" while this point is violated. Invisible Alarm points are recommended for holdup alarms (e.g. panic switches and money clips).

- **Silent Alarms:** This is a point programmed to activate the visual display at the keypad, but **not** to activate audible signals.

- **Bypassing Allowed:** This is a point programmed that is capable of being bypassed (shunted) using the keypad bypass command or the force-arm sequence.

- **Alarm on Short:** This is a point programmed to activate an alarm when its loop is shorted.

- **Alarm on Open:** This is a point programmed to activate an alarm when its loop is opened.

- **Trouble on Open:** This is a point programmed to activate a trouble when its loop is opened and the system is disarmed. If the system is armed, this point will activate an alarm.

- **Perimeter Instant:** This is a point programmed to activate an alarm even during the entry/exit delay period.

- **24 Hour:** This is a point programmed to activate when its loop is faulted, even if the system is disarmed.

- **Entry/Exit Delay #1:** This is a point programmed to be ignored during the entry delay period. If it is violated while the system is armed, it will activate an entry delay for the amount of time programmed for entry/exit delay time #1 (address 0638). The keypad pre-alert sounders will activate and the system may be disarmed during this entry period. If the system is not disarmed during the entry period, this point will activate an alarm.

- **Entry/Exit Delay #2:** This is a point programmed that behaves identical to the Entry/Exit Delay #1 point type except that it uses entry/exit delay time #2 (address 0639).

Note: If both entry/exit delays have been activated, the control will use the shorter entry/exit delay.

- **Interior Entry/Exit Follower:** This is a point programmed to be ignored during the exit delay and then become an interior instant point. If this point is violated while the system is armed and no entry/exit points have been violated, it will activate an alarm. If this point is violated after an entry/exit delay point is violated, it will follow the entry delay time for that point. This point is bypassed by #2 or #3 arming.

- **Interior Home/Away:** This is a point programmed to become an Instant point if the system is armed and an entry/exit delay point is violated during the exit delay time. If the system is armed and an entry/exit delay point is not violated, this point will be bypassed. This point is bypassed by #2 or #3 arming.

- **Interior Instant:** This is a point programmed to activate an alarm even during the entry/exit delay periods. This point is bypassed by #2 or #3 arming.

- **Day Monitor:** This is a point programmed to be an Instant point when the system is armed. When the system is disarmed, any violation of this point will activate the keypad sounders which will sound continuously until a PIN # is entered. The alarm outputs for this point will not activate and there will be no report for this point when the system is disarmed.

 Copyright © 1993

- **Key Switch Input:** This is a point programmed to allow the system to be armed and disarmed using a normally open momentary key switch. Outputs for keypad LEDs and sounders are available using the programmable outputs, Octal relay outputs, or input/output points.

- **Fire Point:** This is a point programmed to activate if the system is armed or disarmed. It can be silenced by entering a user's code. The display will indicate a Fire Alarm for this point on all partitions. A fire reset command must be entered after silencing the alarm to re-enable this point. If this point is programmed for trouble and the loop opens, the keypad will display "Fire Trouble" for this point and the keypad sounders will beep once every ten seconds.

- **Fire Point with Verification:** This is a point programmed that is identical to a fire point except that after the first alarm it will perform a fire reset and then wait up to two minutes for a second alarm. If a second alarm occurs within this two minute period, the system will indicate a fire alarm for this point. If there is no second alarm within this two minute period, the point will reset back to its normal condition.

- **Water Flow Point:** This is a point programmed to operate like a Fire Point, but is specifically intended for water flow switches. An optional retard timer can be programmed to compensate for changes in water pressure. If the timer is used, the water flow point must be activated for the complete time period; an alarm will be initiated at the end of the timer period.

Note: Only points 1 through 4 may be programmed to be water flow points.

- **Supervisory:** This is a point programmed to accommodate shut-off valves and will indicate a supervisory alarm at the keypads when activated.

Output Programming

- **Point Alarm (Latching):** This is an output programmed to activate upon any point alarm and will latch until the system has been disarmed. If this output is following a fire point, it will remain latched until the fire reset command is performed.

- **ON during Entry Pre-Alert:** This is an output programmed to activate when an entry/exit point is violated while the system is armed. It will remain activated until the system is disarmed, or until the entry delay time has expired.

- **ON for 10 sec. after #80 is entered:** This is an output programmed to activate for 10 seconds after #80 is entered at the keypad or if a fire point with verification activates. This output is intended to be used to power 4-wire smoke detectors or any other device that requires a power interruption to reset an alarm condition.

Note: When Programmable Output 2 is programmed this way, it will normally supply Aux. power and will turn OFF for 10 seconds when #80 is entered.

- **ON when System is Armed:** This is an output programmed to activate when the system is armed. It will remain activated until the system is disarmed.

- **Ground Start:** This is an output programmed to activate for 3 seconds when the phone line is seized. It is intended for use with ground start phone systems that require a momentary short to ground to obtain a dial tone. Connect a separate form 'C' relay (not supplied by DS) to this output if using ground start. This output follows all partitions regardless of how data digit 2 of the output programming address is programmed. *Not intended for U.L. Listed systems.*

- **System Status (ready to arm):** This is an output programmed to follow the Status LED of the keypad It will activate when the system is ready to arm with no points violated.

- **Point Alarm:** This is an output programmed to activate when a point is in an alarm condition. It will remain activated until the system is disarmed or the bell cut-off time expires. This output is intended to activate alarm bells and sirens.

- **Point Alarm Delayed by 20 sec.:** This is an output programmed to activate for 20 seconds after a point enters an alarm condition. It will remain activated until the system is disarmed or the bell cut-off time expires. This output is intended to activate alarm bells and sirens, but provides a delay to allow the user to silence the system before it activates.

- **Keypad Sounder Output:** This is an output programmed to follow the keypad sounder. It activates during the entry pre-alert, all loud alarms, all day monitor alarms, chime mode activations, and when a key is pressed.

- **Access Output:** This is an output programmed to activate for 10 seconds when an access code is entered at the keypad. *Not U.L. Listed for Access Control (UL294).*

 Copyright © 1993

General Control Programming

- **Level 1 Arming:** If programmed, Level 1 Arming arms the entire system while allowing entry delays for entry/exit points.
- **Level 2 Arming:** If programmed, Level 2 Arming arms only the perimeter of the system and does **not** allow entry delays for entry/exit points.
- **Level 3 Arming:** If programmed, Level 3 Arming arms only the perimeter of the system while allowing entry delays for entry/exit points.
- **Level 4 Arming:** If programmed, Level 4 Arming allows custom arming of the system and bypasses the point types specified in data address 0632.
- **Level 5 Arming:** If programmed, Level 5 Arming arms the entire system and does **not** allow an entry delay for entry/exit points.
- **Level 6 Arming:** If programmed, Level 6 Arming force arms the entire system, bypasses any violated points, and allows an entry delay for entry/exit points. The number of points that can be force armed is selected in address 0637.
- **Closing Ring-Back:** If programmed, the sounders will activate for 2 seconds after the system is armed successfully. If the system is programmed to check the phone line on arming, the sounders will activate after the system confirms there is a dial tone. If a closing report is programmed, the sounders will activate after the closing report is successfully sent.
- **Siren on Comm. Fail for Silent Point:** If programmed, a silent point will sound the alarm outputs if the point is violated and a communicator failure is detected.
- **Restore when Sounders Silence:** If programmed, a point sends a restoral report and is ready to activate again **only** after the burglary bell cut-off time expires or the bells are silenced. The point can alarm multiple times per armed period.
- **Restore when Point Restores:** If programmed, a point sends a restoral report and is ready to activate again as soon as it physically restores. This point can alarm multiple times per armed period.
- **Restore when System is Disarmed:** If programmed, a point sends a restoral report when the system is disarmed. It can only alarm once per armed period.
- **Allow Swinger Shunts:** If programmed, a point can only alarm up to three times per armed period. After the third alarm, the point will be bypassed and a trouble report for this point will be sent.

Partition Control Programming

- **Partition Control Programming:** Up to four partitions may be used. They are assigned in order. For example: When using only one partition, it is partition one. When using three partitions, they are partitions one, two, and three.
- **Common Area:** Partition 1 can be programmed as a common area to two other partitions or to all the partitions. This allows it to be used in an installation with one common entry area such as a foyer or vestibule. When Partition 1 is programmed as a common area, it will only arm when all the partitions that it is common to are also armed. The common area will disarm when any of the other partitions that it is common to are disarmed only if the user has access to the common area. When using a common area, a master keypad should be used and assigned to the common area (see keypad assignment programming).

Keypad Assignment Programming

- **Keypad Assignment:** The keypad type and the partition it is assigned to must be programmed. Each data address (0016-0019) programs two keypads. For example: data digit 1 of address 0016 is for keypad 1, data digit 2 of address 0016 is for keypad 2.
- **Master Keypad Programming :** A master keypad can be used to access all the partitions. It will display the arm/disarm status of all the partitions and can be used to individually control each partition. (see operating section for an explanation of the keypad displays). A master keypad can be assigned to any of the partitions. Any number of the 8 allowable keypads can be a master keypad. When using the common area, it is suggested that a master keypad be used and that it is assigned to the common area.

 Copyright © 1993

Point Assignment Programming

- **Single Point Input:** This is an individual point such as the on-board points, and multiplex contact points.
- **8-Input Module or Dual Input Remote:** This is a point connected to one of the 8-Input Modules or to a Dual Input Remote. The inputs are programmed separately (see the programming chart for point addresses). When using the Dual Input Remote, loop A is always programmed as an odd number data address (ending in 1, 3, 5, 7, or 9). Loop B is the even numbered data address that follows loop A.

Emergency Key Programming

Note: For the DS7440 Keypad, the clear protective case covering the Emergency Keys must be pulled down before the keys can be pressed.

- **Fire Key:** The emergency key (key A) at the bottom left of the keypad entry area is the Fire Key. If programmed, the key will activate a fire alarm when pressed for 2 seconds.
- **Special Emergency Key:** The emergency key (key B) at the bottom center of the keypad entry area is the Emergency Key. If programmed, the key will activate an emergency alarm when pressed for 2 seconds.
- **Panic Key:** The emergency key (key C) at the bottom right of the keypad entry area is the Panic Key. If programmed, the key will activate a panic alarm when pressed for 2 seconds.

Key 4 Arming Programming

- **Key 4:** If programmed, Key 4 may be used to custom arm the system by arming only certain point types. For example: All interior point types plus some perimeter point types may be bypassed while leaving some of the perimeter armed.

Open/Close Report Control Programming

- **Open and Close Reports:** If programmed, these reports are sent when the system is armed or disarmed. They may be sent independently for the opening and closing of each partition, or the first partition to open and the last partition to close may send the reports.
- **Send Trouble at Close for Bypassed Points:** If programmed, a trouble report will be sent for each point bypassed when the system is armed.
- **Alternate between both Phone Numbers:** If programmed, open and close reports will be sent alternately between both phone numbers until successful.

Phone Number General Control Programming

- **Enable Remote Programmer Callback:** If programmed, when the remote programmer tries to initiate a session with the panel, the panel will hang up and call the remote programmer phone number. This ensures the correct remote programmer is initiating the call
- **Dial Pulse on all Phone Numbers:** If programmed, the panel will dial to phone number 1, 2, and the remote programmer phone number 3 using the pulse format .
- **Dial Tone on all Phone Numbers:** If programmed, the panel will dial to phone number 1, 2, and the remote programmer phone number 3 using the tone format.

Phone Answering Programming

- **Phone Answering Programming:** The panel can be programmed to answer the phone after a selected number of rings for remote programming access. It can also be programmed to answer the phone after a different number of rings when in armed or disarmed states. This can be used to call the panel location and determine its arming state.
- **Answering Machine Bypass:** This feature allows the panel to answer incoming calls when answering machines are used. If the line rings, stops ringing, then rings again within one minute, the panel will seize the phone line on the first ring. To disable this feature, program the panel to answer after 12 rings.

 Copyright © 1993

Force Arming Programming

- **Force Arming:** If programmed, allows violated points to be force armed. When force arming, the user must enter the usual arming command followed by a 9. This automatically bypasses points that are violated **and** programmed as bypassable. Fire points, supervisory points and non-bypassable points can not be force armed. *Not available in U.L. Listed systems.*

Report Programming

- **Reports:** For pulse formats, reports are programmed by entering information in the reporting and extended digits. The report will send the information programmed for each event. For SIA and Contact ID, the report formats are fixed and may be activated by placing a 1 in the reporting digit. To disable a report, enter a 0 in the reporting digit. To send the Man Number along with Open and Close reports, program an "F" (*5) in the extended digit.

Octal Relay Module (DS7488) Programming

- **Octal Relay Module:** The Octal Relay Module connects to the options bus. It provides 8 form 'C' outputs that can be programmed to follow different events. The outputs can follow these events per partition or for all partitions. Each output responds individually from the other 8 outputs for complete flexibility. *Not investigated by Underwriters Laboratories.*

FCC Compliance Notice

This equipment has been tested and found to comply with the limits for a Class B digital device, pursuant to Part 15 of the FCC Rules. These limits are designed to provide reasonable protection against harmful interference in a residential installation. This equipment generates, uses and can radiate radio frequency energy and if not installed and used in accordance with the instructions, may cause harmful interference to radio communications. However, there is no guarantee that interference will not occur in a particular installation. If this equipment does cause harmful interference to radio or television reception, which can be determined by turning the equipment off and on, the user is encouraged to try to correct the interference by one or more of the following measures:

- Re-orient or relocate the receiving antenna.
- Increase the separation between the equipment and the receiver.
- Connect the equipment into an outlet on a circuit different from that to which the receiver is connected.
- Consult the dealer or an experienced radio/TV technician for help.

FCC Phone Connection Notice To Users

This control complies with Part 68 of the FCC rules.

On the inside of the enclosure is a label that contains, among other information, the FCC Registration Number and the Ringer Equivalence Number (REN) for this equipment. You must, upon request, provide this information to your local telephone company.

The REN is useful to determine the quantity of devices that you may connect to your telephone line and still have all of those devices ring when your telephone number is called. In most, but not all areas, the sum of the REN's of all devices connected to one line should not exceed five (5.0). To be certain of the number of devices that you may connect to your line, you may want to contact your local telephone company to determine the maximum REN for your local calling area.

This equipment may not be used on coin service provided by the telephone company. This control should not be connected to party lines.

Should this equipment cause harm to the telephone network, the telephone company may discontinue your service temporarily. If possible, they will notify you in advance. But if advanced notice isn't practical, you will be notified as soon as possible. You will be informed of your right to file a complaint with the FCC. The telephone company may make changes in its facilities, equipment, operations, or procedures that could affect the proper functioning of your equipment. If they do, you will be notified in advance to give you an opportunity to maintain uninterrupted telephone service.

If you experience trouble with this equipment, please contact the manufacturer for information on obtaining service or repairs.

The telephone company may ask that you disconnect this equipment from the network until the problem has been corrected or until you are sure that the equipment is not malfunctioning. The repairs to this equipment must be made by manufacturer and not by the user.
To guard against accidental disconnection, there is

 Copyright © 1993

ample room to mount the Telco jack to the inside of the Control cabinet.

The operation of this Control may also be affected if events such as accidents or acts of God cause an interruption in telephone service.

Canadian Dept. of Communications

General Installation Requirements: Notice: The Canadian Department of Communications label identifies certified equipment. This certification means that the equipment meets certain telecommunications network, protective, operational, and safety requirements. The Department does not guarantee the equipment will operate to the user's satisfaction.

Before installing this equipment, users should ensure that it is permissible to be connected to the facilities of the local telecommunications company. The equipment must also be installed using an acceptable method of connection. In some cases, the company's inside wiring associated with a single line individual service may be extended by means of a certified connector assembly (telephone extension cord). The customer should be aware that compliance with the above conditions may not prevent degradation of service in some situations.

Repairs to certified equipment should be made by an authorized Canadian maintenance facility designated by the supplier. Any repairs or alterations made by the user to this equipment, or equipment malfunctions, may give the telecommunications company cause to request the user to disconnect the equipment.

Users should ensure, for their own protection, that the electrical ground connections of the power utility, telephone lines, and internal metallic water pipe system, if present, are connected together. This precaution may be particularly important in rural areas.

Caution: Users should not attempt to make such connections themselves, but should contact the appropriate electric inspection authority, or electrician, as appropriate.

Terminal Requirements: The Load Number (LN) assigned to each terminal device denotes the percentage of the total load to be connected to a telephone loop which is used by the device, to prevent overloading. The termination on a loop may consist of any combination of devices subject only to the requirement that the total of the Load Numbers of all the devices does not exceed 100. The Load Number of the DS7400 is 2.

RFI Requirements: This digital apparatus does not exceed the Class A limits for radio noise emissions from digital apparatus set out in the Radio Interference Regulations of the Canadian Department of Communications.

Le present appareil numerique n' emet pas de bruits radioelectriques depassant les limites applicables aux appareils numeriques de la classe A prescrites dens le Reglement sur le brouillage radioelectrique edicte par le ministere des Connumications du Canada.

 Copyright © 1993

Operating the DS7400

Turning ON (arming) the System

The green Status light must be on steady (Alpha keypad will show READY TO ARM).

If the green Status light is not on, or display is showing **NOT READY**, then see FORCE ARMING or AREA BYPASS.

Type of Arming Desired	Enter PIN followed by:	What will Happen	What to Do
Normal Circumstances No one on Premises, entry allowed	# 1	• The red Armed light will begin to flash. • ARMED will be displayed (7440 only). • EXIT NOW will display for the exit delay interval. • A single beep will sound. • The red Armed light will turn on after the exit delay expires.	Exit during the exit delay interval. premises.
Someone on Premises, no entry allowed	# 2	• The red Armed light will begin to flash. • PERIMETER INSTANT will be displayed (7440). • EXIT NOW will display for the exit delay interval. • The green Status light will turn on steady. • A single beep will sound. • Only exterior protection areas will be armed. • The red Armed light will turn on after the exit delay.	Move freely around the interior of the premises
Someone on Premises, entry allowed	# 3	• The red Armed light will begin to flash. • PERIMETER ON will be displayed. • EXIT NOW will display for the exit delay interval • The green Status light will turn on steady. • A single beep will sound. • Only exterior protection areas will be armed. • The red Armed light will turn on after the exit delay.	Move freely around the interior of the premises
Custom Arming	# 4	• The red Armed light will begin to flash. • ON PARTIAL will be displayed. • EXIT NOW will display for the exit delay interval. • The green Status light will turn on steady. • A single beep will sound. • The red Armed light will turn on after the exit delay.	Exit during the exit delay interval.
Full Arming, no entry allowed	# 5	• The red Armed light will begin to flash. • ARMED INSTANT will be displayed. • EXIT NOW will display for the exit delay interval. • A single beep will sound. • The red Armed light will turn on after the exit delay.	Exit during the exit delay interval. CAUTION: Violating any point after the exit delay will cause an instant alarm.

 Copyright © 1993

Turning OFF (disarming) the System / Silencing Alarms

Please read the section on Emergency Procedures prior to being confronted with an emergency event.

Type of Disarming	Enter this Code	What will Happen
Disarming the System	PIN NUMBER #	Red Armed light will turn off. Pre-alert sounders will silence.
Silencing Alarms	PIN NUMBER #	Alarms in progress will silence.

Turning OFF (disarming) the System under Duress

A Duress code is used when someone demands, by threatening your life or well-being, that the system be turned off. When used, the code will both turn off the system and report a silent Duress alarm if connected to a monitoring service.

Extreme care should be used when entering your PIN to turn off the system so that a Duress code is not inadvertently entered.

Type of Arming	Enter this Code	What will Happen
Disarming System under Duress	DURESS CODE #	System will appear to disarm normally. A Duress code will be sent to the central station.

Emergency Keypad Alarms

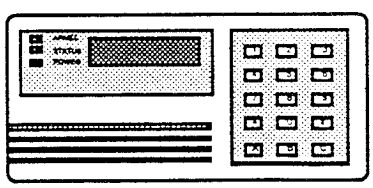

The Alarm Keys [A], [B], and [C] may generate Fire, Supplemental, and Silent alarms if programmed by the installer. Ask your installing company to explain the function of these keys.

The Alarm Keys must be held down for two seconds to generate an alarm. *For the 7440 Keypad, the clear protective case covering the Emergency Keys must be pulled down beforew the keys can be pressed.*

Use the Disarming command sequence to cancel or silence these alarms.

Copyright © 1993

Keypad Displays

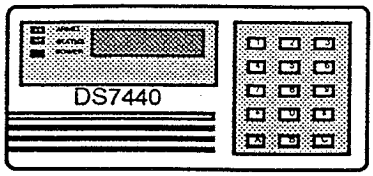

Light	Off	Flashing	On
Armed (red)	The control is disarmed.	Exit delay in progress or an alarm has occured.	The control is armed, and no alarms have occured.
Status (green)	One or more points are not ready to arm.	One or more points are bypassed.	All points are ready to arm.
Power (green)	Control has lost all power; no AC or battery.	Control problems exist. See *Error Display.*	Normal Operation. The control is running on AC power with no problems.

Error Displays

If a control problem occurs, the POWER light will flash and the display will indicate "Control Trouble, Press #87".

Control troubles may be one or more of the following:

1. **AC Power Failure:** There is a power failure and the panel is operating on backup battery.
2. **Low Battery:** If system has just been through a power failure, wait at least two hours for the battery to recharge, then enter #85 to perform a battery test.
3. **Communication Failure:** The communicator failed to communicate with the central station.
4. **System Fault:** Internal error in the control circuitry or optional circuitry. These faults are designated as follows:

   01 = RAM Error
   02 = ROM Error
   03 = EEPROM Error
   04 = Ground Fault
   10 = Loss of Communication to DS7420*
   11 = DS7420 Phone line 1 Fault*
   12 = DS7420 Phone line 2 Fault*
   13 = DS7420 Bell Circuit Fault*
   20 = Loss of Communication to Octal Relay Module DS7488*

   * = Not U.L listed

5. **Keypad Fault:** One of the keypads is not responding.
6. **Multiplex Bus:** The multiplex bus is defective or has been shorted.
7. **Aux Power Fault:** The auxiliary power has been shorted.

Action Desired	Enter PIN followed by:
Read Error Message when green Power light is flashing	# 8 7
Clear Error Display	# 8 7 *

Copyright © 1993

Access Control

Your system may use a Keypad key sequence to activate other electrical devices. The special PIN required to perform this function is known as an Access Control PIN. This feature can be used in armed or disarmed modes.

Momentary Access Control Activation	ACCESS CONTROL PIN #	• The access device will be activated for 10 seconds.

This feature must be disabled on UL certified installations.

Chime Mode

This mode causes the control sounders to beep each time a Perimeter or Entry / Exit area is violated while the control is turned off (disarmed). The #7 command is used to turn the chime mode ON or OFF.

Action Desired	Enter Pin followed by:	What will Happen
Turn ON Chime Mode	# 7	The keypad sounders will beep for two seconds every time a perimeter or entry exit point is violated.
Turn OFF Chime Mode	# 7	

Copyright © 1993

Area Bypass

There may be occasions when it is desirable or necessary to temporarily bypass one or more points prior to arming the system. For instance, an open window may cause the 7440 display to read **NOT READY**.

Only one area may be bypassed each time the command is used. If more than one area requires bypassing, repeat the command for each area to be bypassed.

NOTE: See *Force Arming* for another method of area bypassing.

Type of Bypassing Desired	Enter PIN followed by:	What will Happen	What to Do
Bypass Faulted Points	# 9 1 2 3 (Point Number)	The Status light will begin to Flash.	Arm panel, if desired, with entered zone(s) bypassed.
Read Faulted Points	# 9	BYPASS will be displayed followed by the point number of any bypassed points.	
Clear Individual Bypassed Point(s)	# 9 1 2 3 (Point Number)	Area Bypass will be cleared.	
Clear all Bypasses	# 9 *	All Bypasses will be cleared.	

NOTE: All bypasses are cleared when the system is disarmed, unless they are on 24 hour points.

Force Arming

When one or more points are faulted, the system may be force armed by bypassing the faulted points. The 7440 display will read **NOT READY** when force arming is required to arm the system.

Warning: Bypassing or force arming removes some of your buildings protection because it excludes the faulted points from arming. Therefore, an intrusion may not be detected or the detection may be delayed. Always attempt to correct any point problems (close doors and windows etc.) before using these features. If the problem can not be corrected, contact your installing company.

Type of Arming	Enter PIN followed by:	What will Happen	What to Do	What will Happen	What to Do
Force Arming	# 1 or # 2 or # 3	A 5 second beep occurs, indicating the control has faulted points and needs to be force armed or a three-beep error tone occurs indicating force arming has not been accepted or allowed.	Press 9 during 5 second beep	• The red Alarm LED will flash during the exit delay. • The control panel will arm with faulted points bypassed	If leaving the premises, exit during the exit delay interval

 Copyright © 1993

Fire Reset / Fire Trouble

Fire Reset

A PIN followed by the command below

[#] [8] [0]

will reset any smoke detectors after a fire alarm has occurred.

Before this command is used, determine which smoke detector has alarmed.

Fire Trouble

A Fire Trouble message signifies a problem with the fire system, such as a break in the wiring that monitors smoke detectors.

A Fire Trouble will be indicated by a short beep from the keypad sounders every 10 seconds. The 7440 will display a message of FIRE TROUBLE and will display the point(s) in a trouble condition.

The Fire Trouble beep can be silenced with any PIN followed by the [Command/#] key. After problems have been remedied, a PIN [#] should again be entered to clear the FIRE TROUBLE display.

 Copyright © 1993

Fire Safety

WARNING: No fire detection device or system should be considered 100% fool proof.

This fire alarm system can provide early warning of a developing fire. Such a system, however, does not assure protection against property damage or loss of life resulting from a fire. **Any fire alarm system may fail to warn for any number of reasons (e.g. smoke not reaching a detector that is behind a closed door).**

When considering detectors for residential applications, refer to NFPA Standard 72, "The National Fire Alarm Code." This standard is available at a nominal cost from: The National Fire Protection Association, Batterymarch Park, Quincy, MA. 02269.

If Installed in Family Residences:

Adherence to the NFPA Standard 72 can lead to reasonable fire safety when the following items are practiced:

• **Minimize hazards:** Avoid the three traditional fire killers: smoking in bed, leaving children home alone, and cleaning with flammable liquids.

• **Providing a fire warning system:** Most fire deaths occur in the home, the majority, during sleeping hours. The minimum level of protection requires smoke detectors to be installed outside of each separate sleeping area and on each additional story of the dwelling.

For added early warning protection, it is recommended that detectors be installed in all separated areas including the basement, bedrooms, dining room, utility room, furnace room, and hallways.

• **Having and practicing an escape plan:** *A fire warning may be wasted unless the family has planned in advance for a rapid and safe exit from the building.*

- Draw a floor plan of the entire house showing **two** exits from each bedroom, and **two** from the house. Since stairwells and hallways may be blocked during a fire, the plan should provide exits from bedroom windows.

Make copies of the plan and practice it with all family members.

- Pre-arrange a meeting place **outside and away from** the residence. Once out of the building, all occupants should immediately go to the pre-selected location to be accounted for.

- Provide a barricade between family members and fire, smoke, and toxic gases (e.g. close all bedroom doors before retiring).

- Children should be instructed on opening their bedroom windows and exiting safely from the building. If exiting is not possible, they should be taught to stay at the open window and shout for help until it arrives.

- In the event of a fire alarm after retiring, awake the children by shouting to them from behind your closed door. Tell them to keep their bedroom doors closed.

- **If the top of your bedroom door is uncomfortably hot, do not open it.** There is most likely fire, intolerable heat, or smoke on the other side. Shout to all family members to keep their bedroom doors closed and to exit the building via alternate routes.

- If the top of the door is not uncomfortably hot, brace the bottom of the door with your foot, and the top with one hand, then open the door about one inch. Be prepared to slam the door shut if there is any pressure against the door or if any hot air rushes in.

- If there is no evidence of excessive heat or pressure, **leave the room and close the door behind you.** Shout appropriate instructions to all family members and immediately leave the building via the pre-planned routes. If heavy smoke is present, drop to your hands and knees, or crawl to remain below the smoke level.

Installation Considerations

Proper location of detection devices is one of the most critical factors in a fire alarm system.

The following are some general considerations:

• Smoke detectors should not be installed in "dead air" spaces or close to ventilating or airconditioning outlets because smoke may be circulated away from the detector. Locations near air inlets should be favored.

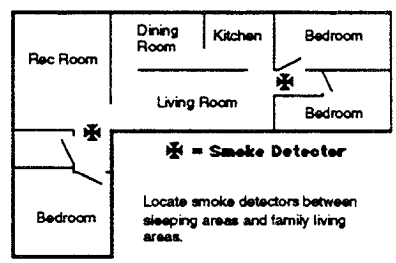

• Avoid areas subject to normal smoke concentrations such as kitchens, garages, or near fireplaces.

• Do not install smoke detectors where normal area temperatures are above 100 degrees F. (38° C.) or below 32 degrees F. (0° C.).

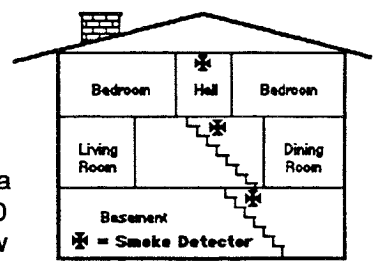

A smoke detector should be located on each story including basements, but excluding crawl spaces and unfinished attics.

• Areas of high humidity and dust concentrations should be avoided.

• The edge of ceiling mounted detectors should be no closer than 4 inches (10 cm) from any wall.

• Place the top edge of wall mounted detectors between 4 and 12 inches (10 to 30 cm) from the ceiling.

For exact mounting information, refer to the instructions provided with the smoke detectors.

Copyright © 1993

Personal Identification Numbers

General Information

When programing Personal Identification Numbers, it is helpful to know the following terms:

- **PIN:** Personal Identification Number. This is the code entered at the keypad to gain access to the system.
- **Man Number:** This number represents the person using the system.
- **Authority Level:** This number represents the ability each person has and determines which functions they can perform.

Your system has 60 PINs, each 4 digits long. **Each Man Number can have only one PIN.** Attempting to assign the same PIN to two different Man Numbers will result in the three-beep error tone, and the change will not be made.

Man Number 01 is designated as a **Master Code** and requires authority level 0. It can be used to add, delete, read back, or change other PINs.

Man Number 01 is shipped from the factory with the sequence of 1 2 3 4. **This code should be changed to one of your personal preference, and must be programmed as a Master Code.** PINs should never be programmed with common sequences such as 1234, 1111, or 2468.

Removing a Pin

To disable (remove) a PIN, enter a Master Code, [Command/#] - [Program/0] - [Program/0], the PIN to be cancelled, and then [Command/#] again.

Note: PIN 01 can not be cancelled in this manner.

Steps to Change a PIN	Enter	If Accepted, Display Reads
# 1. Enter Master Code Program Mode.	1234 #0 Master Code	"0 User Change"
# 2. Enter 0.	0	"ENTER MAN No." (001..0XX)
# 3. Enter the Man Number.	001-060	"ENTER Authority Level" Level (0-6)
# 4. Enter the Authority Level.	0-6	"ENTER Area(s) or # for all"
# 5. Enter the Area(s) (partition(s)) this user has access to.	1, 2, 3, and/or 4 then #	"ENTER Next Area, End with #"
# 6. Enter the PIN.	Any 4 digits	"ENTER CODE"
# 7. Enter the PIN again followed by the # key.	PIN #	"Verify Code End with #" Long beep sounds signifying acceptance of the new code.

PIN Authority Levels

0 = **Master code:** Can enter all commands, change PINs, change time and date, bypass, arm and disarm, and view history. PIN1 must be a master code and must have authority 0. Any or all PINs may be master codes.

1 = **Unlimited Code**: Can enter all commands, bypass, arm and disarm. Can not change PINs.

2 = **General Code**: Can bypass, arm and disarm. Can not change PINs or enter Command 7 or any of the Command 8 functions.

3 = **Arm Only Code:** Can arm the system with command 1 arming only. Can not perform any other functions including disarming.

4 = **Temporary Code:** Valid only for a specified time. Can arm and disarm the system, but can not perform any other functions.

5 = **Duress Code:** When the system is disarmed using a duress code, a silent report is sent to the central station. Duress codes are intended to be used when the user is forced to disarm the system.

6 = **Access Code:** When a PIN with Access Code authority is entered, any output programmed for Access Output will pulse on for 10 seconds (works when the system is armed or disarmed).

 Copyright © 1993

Changing the Date, Experation Date (for Temp. Codes), and the Time

Steps to Change the Date	Enter	If Accepted, Display Reads
# 1. Enter Master Code Program Mode.	1234 #0 Master Code	"0 User Change" "2 Change Date"
# 2. Enter 2.	2	"ENTER Month" (01...12)
# 3. Enter the Month.	01-12 (01= Jan / 12 = Dec)	"ENTER Day." (01...31)
# 4. Enter the Day.	01-31	"ENTER Year." (XX) End with #
# 5. Enter the Year	The last two digits of the year.	"Month, Day, Year"

Steps to Change the Exp. date for Temp. Codes	Enter	If Accepted, Display Reads
# 1. Enter Master Code Program Mode.	1234 #0 Master Code	"0 User Change" "2 Change Date" "3 Change Date of Code Expiration"
# 2. Enter 3.	3	"ENTER Month" (01...12)
# 3. Enter the expiration Month.	01-12 (01= Jan. 12 = Dec.)	"ENTER Day." (01...31)
# 4. Enter the expiration Day. *The temporary code will expire at Midnight on the day selected.*	01-31	"ENTER Year." (XX) End with #
# 5. Enter the expiration Year.	last two digits of the year followed by #	"Month, Day, Year"

Steps to Change the Time	Enter	If Accepted, Display Reads
# 1. Enter Master Code Program Mode.	1234 #0 Master Code	"0 User Change" "2 Change Date" "3 Change Date of Code Expiration" "6 Change Time"
# 2. Enter 6.	6	"ENTER Day" (01...07)
# 3. Enter the day	1-7 (1=Sunday, 7 = Saturday)	"ENTER Time." (0100...1259)
# 4. Enter the Time (Hour and minute)	0100-1259	"ENTER AM/PM." (4/6) End with #
# 5. Enter AM or PM.	4# or 6# (4=AM, 6=PM)	"Day - Time"

Copyright © 1993

Testing

Point Test

The Point Test is used to confirm that detectors will report alarms to the keypad. Point Test works on all burglary areas **except 24 hour points and fire points.**

While the keypad is in Point Test, no control alarms will activate an alarm, except a 24 hour point alarm or a fire alarm. These will override the Area Test function.

Type of Test	Enter a PIN followed by:	What will Happen	What to Do
Point Test	# 8 1	TEST POINT will display followed by the point number of any points that have not been tested. NOW TESTING will display followed by the point number of any points that are violated.	Test each detector one at a time as instructed by the installing company. To exit the Area Test mode, enter your PIN followed by #.

Battery/Sounder Test

In the event of a power failure, your control has a built-in battery that will continue to power the control for many hours. The control automatically recharges the battery when power is restored.

In addition to an automatic battery test performed every 24 hours, the battery may also be tested manually.

This test also uses the battery to manually activate all the system sounders for 2 seconds. If the battery voltage is low, a battery fault will occur (see *Error Display).*

Communicator Test

This test is available only if your system transmits alarms and system information to a monitoring service, and has been programmed by the security installing company to permit communicator tests. A long beep will initially sound to acknowledge the start of the test. If the test is successful, the sounder will again issue one long beep. If the test fails, the keypad sounder will turn ON continuously. To silence the sounder, enter you PIN followed by the command key or press the reset * key.

Type of Test	Enter a PIN followed by:	What will Happen	What to Do
Battery/ Sounder Test	# 8 5	• All LEDs will light. • The keypad sounder and all alarm sounding devices will operate for 2 seconds.	If test fails, the control will indicate a Control Problem. See Error displays. If power in your building has been off recently, wait 2 hours for the battery to recharge and then try again.
Communicator Test	# 8 2	• A long beep will sound. • A "Test" report is sent to the monitoring service.	If test fails, the keypad sounder will sound continuously. To silence the sounder, enter your PIN followed by the command key or the reset * key. **Note:** This test may take several minutes to complete because the control will try 10 attempts before it fails this test.

 Copyright © 1993

The Master Keypad

The system may include a Master Keypad.

A Master Keypad gives access to all the partitions a user has access to. This is different from the normal keypads in the DS7400, in that normal keypads only give access to the partition they are assigned to. A Master keypad can be used to access all partitions. It will display the arm/disarm status of all the partitions and can be used to individually control each partition. The functioning of the Master Keypad can be changed to access partitions individually by entering Single Partition Mode. Single Partition Mode allows a user to program any or all of the partitions they have access to on an individual (one by one) format.

Master Keypad Displays

Light	Off	Flashing	On
Armed (red)	All partitions are disarmed.	One or more partitions are armed, or an alarm has occured.	All partitions are armed, and no alarms have occured.
Status (green)	Not ready to arm.	One or more points are bypassed.	All partitions are ready to arm.
Power (green)	Control has lost all power; no AC or battery.	Control problems exist. See *Error Display.*	Normal Operation. The control is running on AC power with no problems.

Master Keypad displays will differ slightly from normal keypads.
The Master Keypad display will show the Status of each partition, followed by the partition number.
For example, if all partitions are armed, the display will read:

Armed
partition 1234

If only partitions 1 and 3 are armed, the display will read:

Armed
partition 1 3

Displays for partitions that are Ready to Arm and Not Ready will display in the same manner.

Arming and Disarming with the Master Keypad

Arming and Disarming from the Master Keypad uses the same command sequences as the other keypads.
The sequences will change the state of all the partitions you have access to.

Single Partition Mode

Single Partition Mode is used to control individual partitions from the Master Keypad. To enter the Single Partition Mode, enter your PIN, then press the command key twice. This will call up the first partition you have access to. Enter the command sequence you wish for this partition. You do not need to use your PIN again to arm this partition or to bypass points. You do need to use your PIN to disarm this partition. To move on to the next partition you have access to, press the command key twice.

To exit the Single Partition Mode, hold the reset (*) key down for 2 seconds. The system will automatically drop out of Single Partition Mode after 40 seconds of no keypad entries.

 Copyright © 1993

How to Program the DS7400

Entering the Programmer's Mode: To enter the Programmer's Mode, enter the Programmer's Code followed by # 0.

9 8 7 6 # 0

The default Programmer's Code is 9876.

Reading back a Program Address: To read back a Program Address, enter the Program Address followed by #.

0 0 0 0 #

The display will look like this:

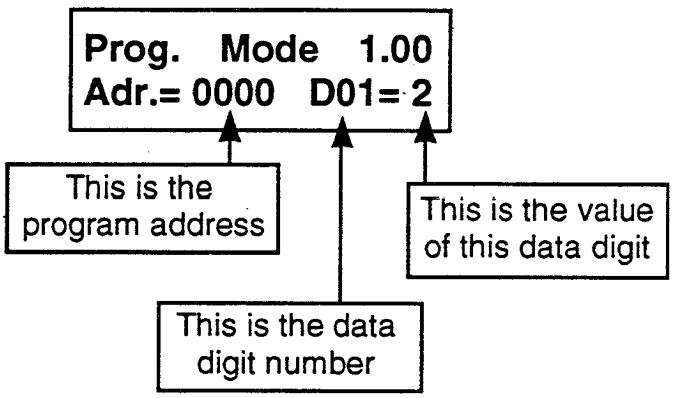

Entering a value in a Program Address: To enter a value in the Program Adress, enter the Program Address, then enter the value for each Data Digit followed by #.

Program Address	Data Digit value
0 0 0 0	1 1 #

The display will show the Program Address and the value of each Data Digit as you enter them. The data will be programmed (saved) when you press the # key.

The control will automatically increment to the next program address.

- If you wish to program the next address, enter the information for that address.
- If you wish to read back the value of this address, press the # key.
- If you wish to program a different address, press the reset (*) key two times and enter the program address you wish to program.

If you make a mistake at any time, press the reset (*) key two times (before pressing the # key).

HEX values: Some Data Digit values are higher than 9. These values are programmed by pressing the reset (*) key followed by some other number. These values will display as HEX characters when entered.

The HEX character values are as follows:

*0 = A *1 = B *2 = C *3 = D *4 = E *5 = F

Defaults: The DS7400 is shipped from the factory as a working, pre-programmed control.

Many of the programming addresses may already be set to the values you need.

The default values are shown in **reverse print**

If the value you would like is in **reverse print**, you don't need to re-program this address.

In the example below, a "0" is the default value:

	0	1	2	3	4	5	6	7	8	9
Feature 1	●					●				●
Feature 2		●					●			●
Feature 3			●					●		●

If the default value is not shown in reverse print, it will be shown in (parenthesis) and designated as the default value or displayed in a separate table.

Setting the Control to the Factory Default: To set the control's programming values to the factory default, enter "0 1" for Program Address 2010.

NOTE: Entering "0 1" in Program Address 2010 will immediately rest the control to the factory default. Any programming done by the installer will be erased.

Only enter "0 1" in Program Address 2010 when you are completely sure you want to erase all installer programming.

Copyright © 1993

Understanding the Programming Charts

The Programming Reference Guide makes use of two types of charts. Each is described below.

If the chart looks like this:
A combination of features is available to be programmed for that particular address.

	Enter the Data Digit as a:							
Select Options	0	1	2	3	4	5	6	7
Partition 1	●		●		●		●	
Partition 2		●		●		●		●
Partition 3			●	●			●	●
Partition 4					●	●	●	●

Enter one of these numbers for the appropriate data digit

The dots represent which options/features are included with each selection

Example:
To select **Partition 2** only, enter the data digit as a 1.
To select **Partition 2** and **Partition 4**, enter the data digit as a 5.

Identifies the options/features available for this address

If the chart looks like this:
Only a single feature is available to be programmed for that particular address.

Represents the option/feature available for this address.

Example:
To select **Disabled**, enter the data digit as a 0.
To select **Entry/Exit Delay #2**, enter the data digit as a 4.

Select Option	DD
Disabled	0
Perimeter Instant	1
24 Hour	2
Entry/Exit Delay #1	3
Entry/Exit Delay #2	4

Enter one of these numbers for the appropriate the data digit

Copyright © 1993

Programming the DS7400

Point Type Programming: Program Addresses (0000-0007)

Point Type #	Address	Default
1	0000	23
2	0001	24
3	0002	21
4	0003	25
5	0004	24
6	0005	27
7	0006	22
8	0007	*5 *0

Data Digit
1 2

Select Options	Enter the Data Digit as a:															
	0	1	2	3	4	5	6	7	8	9	*0	*1	*2	*3	*4	*5
Invisible Alarm	●				●				●				●			
Silent Alarm		●				●				●				●		
Steady Alarm Output			●				●				●				●	
Pulsing Alarm Output				●				●				●				●
Bypassing Allowed	●	●	●	●	●	●	●	●								
Alarm on Short	●	●	●	●	●	●	●	●	●	●	●	●	●	●	●	●
Alarm on Open	●	●	●	●					●	●	●	●				
Trouble on Open					●	●	●	●					●	●	●	●

Select Option	DD
Disabled	0
Perimeter Instant	1
24 Hour	2
Entry/Exit Delay #1	3
Entry/Exit Delay #2	4
Interior Entry /Exit Follower	5
Interior Home/Away	6
Interior Instant	7
Day Monitor	8
Keyswitch Input	9
Fire Zone with verification	*0
Fire Zone without verification	*1

Copyright © 1993

Programming the DS7400

Output Programming: Program Addresses (0008-0010)

Output	Address	Default
Alarm	0008	6 *5
Programmed Output 1	0009	3 *5
Programmed Output 2	0010	2 *5

Data Digit

1 2

Select Option	DD
Point Alarm (Latching)	0
ON during Entry Pre-Alert	1
ON for 10 s after entering #80	2
ON when system is Armed	3
Ground Start	4
System Status (ready to arm)	5
Point Alarm	6
Point Alarm delayed by 20 sec	7
Keypad Sounder Output	8
Access Ouput (10 sec. pulse)	9

	Enter the Data Digit as a:															
Options	0	1	2	3	4	5	6	7	8	9	*0	*1	*2	*3	*4	*5
Disabled	●															
Partition 1		●	●	●										●	●	●
Partition 2					●	●	●							●	●	●
Partition 3								●	●	●				●	●	●
Partition 4											●	●	●	●	●	●
Burg Alarm		●		●	●		●	●		●	●		●	●		●
Fire Alarm			●	●		●	●		●	●		●	●		●	●

General Control Programming: Program Address (0011)

Data Digit

1 2

	Enter the Data Digit as a:															
Select Options	0	1	2	3	4	5	6	7	8	9	*0	*1	*2	*3	*4	*5
Allow level 1, 4, and 6 Arming	●	●	●	●	●	●	●	●	●	●	●	●	●	●	●	●
Allow level 2 Arming	●	●			●	●			●	●			●	●		
Allow level 3 Arming	●	●			●	●			●	●			●	●		
Allow level 5 Arming	●	●			●	●			●	●			●	●		
Closing Ring-Back					●	●	●	●					●	●	●	●
Siren on Comm. Fail for Silent Point									●	●	●	●	●	●	●	●

	Enter DD as a:				
Select Options	0	1	2	3	4
Restore when Sounders Silence	●			●	
Restore when Point Restores		●			●
Restore when System is Disarmed			●		
Allow Swinger Shunts				●	●

Copyright © 1993

Programming the DS7400

Partition Control Programming: Program Address (0012)

Data Digit

1	2
	0

Data Digit 2 must be 0 **0**

Select Options	Enter Data Digit as a: 0	1	2	3	4	5	6
Use 1 Partition	●						
Use 2 Partitions		●					
Use 3 Partitions			●		●		
Use 4 Partitions				●		●	●
Partition 1 common to Partition 2					●	●	●
Partition 1 common to Partition 3					●	●	●
Partition 1 common to Partition 4							●

Keypad Assignment Programming: Program Addresses (0016-0019)

Keypad	Addresses	Data Digit	Default
1	0016	1	2
2	0016	2	0
3	0017	1	0
4	0017	2	0
5	0018	1	0
6	0018	2	0
7	0019	1	0
8	0019	2	0

Data Digit

1	2

Select Options	Enter the Data Digit as a: 0	1	2	3	4	5	6	7	8	9	*0	*1	*2
Disabled	●												
LED Keypad		●		●		●		●					
Alpha (LCD) Keypad			●		●		●		●	●	●	●	●
Belongs to Partition 1		●	●							●			
Belongs to Partition 2				●	●						●		
Belongs to Partition 3						●	●					●	
Belongs to Partition 4								●	●				●
Master Keypad										●	●	●	●

Copyright © 1993

Programming the DS7400

Point Assignment Programming: Program Addresses (0022-0085)

Note:
Point Types are programmed on page 26.

Point Number	Address	Default
1	0022	01
2	0023	02
3	0024	03
4	0025	04
5	0026	05
6	0027	06
7	0028	07
8	0029	08
9-64	0030-0085	00

Data Digit

1	2

Select Options	Enter Data Digit as a: 0	1	2	3	4	5	6	7
Onboard Point or Single Point Input	●	●	●	●				
8 Input Module or Dual Input Remote					●	●	●	●
Belongs to Partition 1	●				●			
Belongs to Partition 2		●				●		
Belongs to Partition 3			●				●	
Belongs to Partition 4				●				●

Select Option	DD
Disabled	0
Follow Point Type 1	1
Follow Point Type 2	2
Follow Point Type 3	3
Follow Point Type 4	4
Follow Point Type 5	5
Follow Point Type 6	6
Follow Point Type 7	7
Follow Point Type 8	8

Copyright © 1993

Programming the DS7400

Alpha Description Programming: Program Addresses (0150-0341 and 0534-0545)

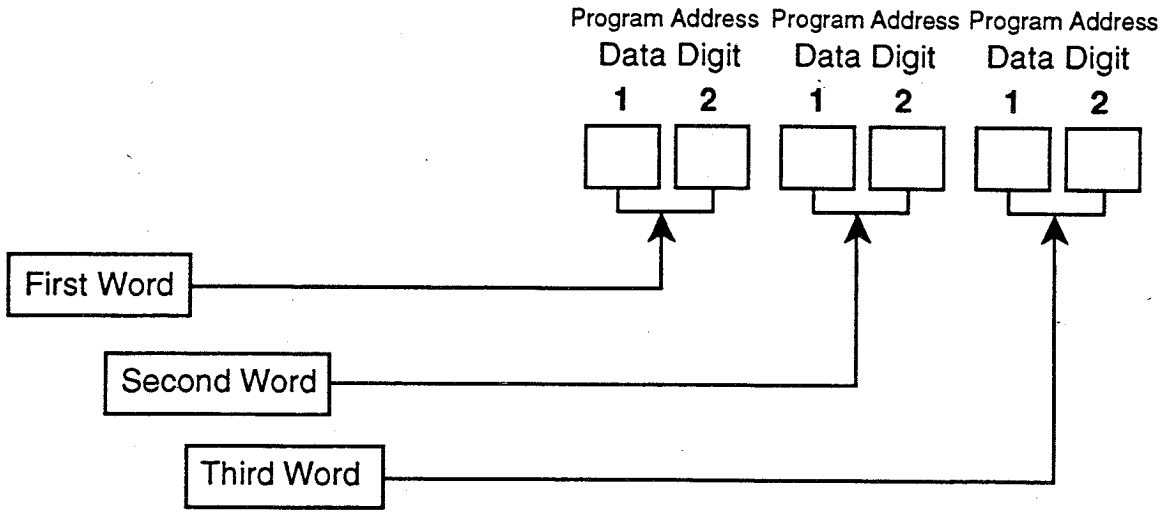

For Alpha programming Addresses, see the program chart on pages 37-40. To input an Alpha description for a point, use the chart on the next page (17).

Copyright © 1993

Programming the DS7400

Alpha Word Programming Values:

Value	Word	Value	Word	Value	Word	Value	Word
10	1st	63	EMERGENCY	*26	MARKETING	2*0	SKYLIGHT
20	2nd	73	ENGINEERING	*36	MASTER	3*0	SLIDING
30	3rd	83	ENTRANCE	*46	MAT	4*0	SMOKE
40	4th	93	EXIT	*56	MEDICAL	5*0	SOUTH
50	5th	*03	EXTERIOR	07	MEZZANINE	6*0	SPRINKLER
60	6th	*13	FACTORY	17	MONITOR	7*0	STAGE
70	ACCOUNTING	*23	FAMILY	27	MOTION	8*0	STAIRS
80	AID	*33	FENCE	37	NORTH	9*0	STATION
90	ALARM	*43	FIELD	47	NURSERY	*0*0	STOCK
*00	AREA	*53	FIRE	57	OFFICE	*1*0	STORAGE
*10	ATTIC	04	FIRST	67	OPERATIONS	*2*0	STUDIO
*20	AUDIT	14	FLOOR	77	OUTSIDE	*3*0	STUDY
*30	AUDITORIUM	24	FLOW	87	OVEN	*4*0	SWIMMING
*40	BACK	34	FOIL	97	OVERHEAD	F*0	SYSTEM
*50	BALCONY	44	FOURTH	*07	PAINT	0*1	TAMPER
01	BASEMENT	54	FOYER	*17	PANIC	1*1	TEST
11	BATHROOM	64	FREEZER	*27	PANTRY	2*1	TESTING
21	BEDROOM	74	FRONT	*37	PARKING	3*1	THIRD
31	BOILER	84	FUEL	*47	PARLOR	4*1	TOOL
41	BOYS	94	FURNACE	*57	PATIO	5*1	TOWER
51	BREAK	*04	GARAGE	08	PERIMETER	6*1	TRAINING
61	BREAKFAST	*14	GATE	18	PERSONNEL	7*1	TRANSOM
71	BUTTON	*24	GIRLS	28	PHONE	8*1	TRAP
81	CABINET	*34	GLASS	38	PLANT	9*1	VALVE
91	CAFETERIA	*44	GUEST	48	PLAY	*0*1	VAULT
*01	CARPORT	*54	GUN	58	POLICE	*1*1	VICE
*11	CASE	05	GYM	68	POOL	*2*1	WALL
*21	CASH	15	HALL	78	PORCH	*3*1	WAREHOUSE
*31	CEILING	25	HATCH	88	PRESIDENT	*4*1	WATER
*41	CELLAR	35	HEAT	98	PRODUCTION	F*1	WEST
*51	CLOSET	45	HOLDUP	*08	PULL	0*2	WINDOW
02	COMPUTER	55	HOUSE	*18	PUMP	1*2	YARD
12	CONFERENCE	65	INCOMING	*28	PURCHASING	2*2	ZONE
22	CONTROL	75	INSIDE	*38	QUALITY		
32	COOLING	85	INSPECTION	*48	REAR		
42	COPIER	95	INTERIOR	*58	RECEIVING	0*4	Custom Word 1
52	COPY	*05	JANITOR	09	RECEPTION	1*4	Custom Word 2
62	CORRIDOR	*15	KEYSWITCH	19	RECREATION	2*4	Custom Word 3
72	COURT	*25	KITCHEN	29	REPAIR	3*4	Custom Word 4
82	DECK	*35	LAB	39	RESEARCH	4*4	Custom Word 5
92	DEN	*45	LAUNDRY	49	ROOF	5*4	Custom Word 6
*02	DETECTION	*55	LAVATORY	59	ROOM	6*4	Custom Word 7
*12	DETECTOR	06	LEVEL	69	RUMPUS	7*4	Custom Word 8
*22	DEVELOPMENT	16	LIBRARY	79	SAFE	8*4	Custom Word 9
*32	DINING	26	LIQUOR	89	SALES	9*4	Custom Word 10
*42	DOCK	36	LIVING	99	SCREEN		
*52	DOOR	46	LOADING	*09	SECOND		
03	DOWNSTAIRS	56	LOBBY	*19	SECURITY		
13	DRAFTING	66	LOFT	*29	SENSOR		
23	DRAWER	76	LOUNGE	*39	SERVICE		
33	DRIVEWAY	86	LOWER	*49	SHED		
43	EAST	96	MAIN	*59	SHIPPING		
53	ELEVATOR	*06	MAINTENANCE	0*0	SHOP		
		*16	MANAGER	1*0	SIDE		

Copyright © 1993

Programming the DS7400

Custom Word Programming: Program Addresses (0546-0625)

When programming Alpha information, the standard library of words is sufficient for most applications. If additional words are needed, 10 custom words may be created (programmed). Custom Words are programmed one character at a time. Each character uses two Data Addresses. The Character values are shown in the chart below.

Value	Character	Value	Character	Value	Character	Value	Character
02	blank space	83	8	15	Q	86	h
12	!	93	9	25	R	96	i
22	"	*03	:	35	S	*06	j
32	#	*13	;	45	T	*16	k
42	$	*33	<	55	U	*26	l
52	%	*43	=	65	V	*36	m
62	&	*53	?	75	W	*46	n
72	'	04	@	85	X	*56	o
82	(	14	A	95	Y	07	p
92	)	24	B	*05	Z	17	q
*02	*	34	C	*15	[	27	r
*12	+	44	D	*25	\	37	s
*22	,	54	E	*35	]	47	t
*32	-	64	F	*45	^	57	u
*42	.	74	G	*55	_	67	v
*52	/	84	H	06	`	77	w
03	0	94	I	16	a	87	x
13	1	*04	J	26	b	97	y
23	2	*14	K	36	c	*07	z
33	3	*24	L	46	d	*17	{
43	4	*34	M	56	e	*27	|
53	5	*44	N	66	f	*37	}
63	6	*54	O	76	g	*47	~
73	7	05	P				

The ">" character is used to link two words together without a space, or to add additional characters to the end of a word such a "s" for plurals. The ">" character is displayed using a value of "E3" and should be placed at the end of the first word. the second word can be a custom word or a standard library word.

The Custom Words are programmed in the following addresses:

Custom Word Number	First Program Address
1	0546
2	0554
3	0562
4	0570
5	0578
6	0586
7	0594
8	0602
9	0610
10	0618

Copyright © 1993

Programming the DS7400

Emergency Key Programming: Program Address (0630)

Data Digit
1 2

Select Option	DD
Fire Key Disabled	0
Fire Key = Silent Alarm	1
Fire Key = Steady Alarm	2
Fire Key = Pulsed Alarm	3

Select Option	DD
Special Emergency Key Disabled	0
Special Emergency Key = Silent Alarm	1
Special Emergency Key = Steady Alarm	2
Special Emergency Key = Pulsed Alarm	3

Copyright © 1993

Programming the DS7400

Panic Key Programming: Program Address (0631)

Data Digit

1	2
	0

Select Option	DD
Panic Key Disabled	0
Panic Key = Silent Alarm	1
Panic Key = Steady Alarm	2
Panic Key = Pulsed Alarm	3

Data Digit 2 must be 0 **0**

Key 4 Arming Programming: Program Address (0632)

Data Digit

1	2

	Enter the Data Digit as a:															
Select Options	**0**	1	2	3	4	5	6	7	8	9	*0	*1	*2	*3	*4	*5
Bypass Point Type 1		●		●		●		●		●		●		●		●
Bypass Point Type 2			●	●			●	●			●	●			●	●
Bypass Point Type 3					●	●	●	●					●	●	●	●
Bypass Point Type 4									●	●	●	●	●	●	●	●

	Enter the Data Digit as a:															
Select Options	**0**	1	2	3	4	5	6	7	8	9	*0	*1	*2	*3	*4	*5
Bypass Point Type 5		●		●		●		●		●		●		●		●
Bypass Point Type 6			●	●			●	●			●	●			●	●
Bypass Point Type 7					●	●	●	●					●	●	●	●
Bypass Point Type 8									●	●	●	●	●	●	●	●

Copyright © 1993

Programming the DS7400

Open/Close Report Control Programming: Program Address (0633)

Data Digit 1 2

Select Options	Enter the Data Digit as a: 0	1	2	3	4	5	6	7	8	9	*0	*1
Do not report opens or closes	●						●					
Report opens and closes in Partition 1		●	●	●	●			●	●	●	●	
Report opens and closes in Partition 2			●	●	●				●	●	●	
Report opens and closes in Partition 3				●	●					●	●	
Report opens and closes in Partition 4					●						●	
Report first Partition to open and last Partition to close						●						●
Send Trouble at close for Bypassed Points							●	●	●	●	●	●

Select Option	DD
Alternate between both Phone Numbers	0
Report to Phone Number 1	1
Report to Phone Number 2	2
Report to Phone Number 1 and 2	3

Report Control Programming: Program Address (0634)

Select Option	DD
Alternate between both Phone Numbers	0
Report to Phone Number 1	1
Report to Phone Number 2	2
Report to Phone Number 1 and 2	3

Data Digit 1 2

Data digit 1 is for Point Alarm, Point Restoral, and Point Trouble Reports.

Data Digit 2 is for all other Reports

Select Option	DD
Alternate between both Phone Numbers	0
Report to Phone Number 1	1
Report to Phone Number 2	2
Report to Phone Number 1 and 2	3

Copyright © 1993

Programming the DS7400

Phone Number General Control Programming: Program Address (0635)

Select Options	Enter the DD as a: 0	1	2	3	4	5
Enable Remote Programmer Callback		●		●		●
Dial Pulse on all Phone Numbers	●	●				
Dial Tone on all Phone Numbers			●	●	●	●
Switch from Tone to Pulse after 5 attempts			●	●		

Data Digit 1 2

*0 4

Data Digit 2 Must be 4

Phone Answering Programming: Program Address (0636)

Data Digit 1 2

Select Option When Armed:	
Don't Answer Phone	0
Answer Phone on 1 ring	1
Answer Phone on 2 rings	2
Answer Phone on 3 rings	3
Answer Phone on 4 rings	4
Answer Phone on 5 rings	5
Answer Phone on 6 rings	6
Answer Phone on 7 rings	7
Answer Phone on 8 rings	8
Answer Phone on 9 rings	9
Answer Phone on 10 rings	*0
Answer Phone on 11 rings	*1
Answer on 12 rings: Disable answering machine Bypass	*2
Answer Phone on 13 rings	*3
Answer Phone on 14 rings	*4
Answer Phone on 15 rings	*5

Select Option When Disarmed:	
Don't Answer Phone	0
Answer Phone on 1 ring	1
Answer Phone on 2 rings	2
Answer Phone on 3 rings	3
Answer Phone on 4 rings	4
Answer Phone on 5 rings	5
Answer Phone on 6 rings	6
Answer Phone on 7 rings	7
Answer Phone on 8 rings	8
Answer Phone on 9 rings	9
Answer Phone on 10 rings	*0
Answer Phone on 11 rings	*1
Answer on 12 rings: Disable answering machine Bypass	*2
Answer Phone on 13 rings	*3
Answer Phone on 14 rings	*4
Answer Phone on 15 rings	*5

Copyright © 1993

Programming the DS7400

Force Arming Programming: Program Address (0637)

Select Option	DD
Do not allow Force Arming	0
Allow up to 1 point to be Force Armed	1
Allow up to 2 points to be Force Armed	2
Allow up to 3 points to be Force Armed	3
Allow up to 4 points to be Force Armed	4
Allow up to 5 points to be Force Armed	5
Allow up to 6 points to be Force Armed	6
Allow up to 7 points to be Force Armed	7
Allow up to 8 points to be Force Armed	8
Allow up to 9 points to be Force Armed	9

Data Digit

1	2
	0

Data Digit 2 must be 0 **0**

Timer Programming: Program Addresses (0638-0642)

Entry Delay Time 1
Address 0638

00 to 99 seconds	Default = 45 sec

Data Digit

1	2

Entry Delay Time 2
Address 0639

00 to 99 seconds	Default = 45 sec

Data Digit

1	2

Exit Delay Time
Address 0640

00 to 99 seconds	Default = 60 sec

Data Digit

1	2

Fire Bell Cutoff
Address 0641

00 to 99 min.	Default =04 min.

Data Digit

1	2

Burglary Bell Cutoff
Address 0642

00 to 99 min.	Default =04 min.

Copyright © 1993

Programming the DS7400

Report Programming: Program Addresses (0654-0697)

Note:
- When using SIA or Contact ID format, place a '1' in the reporting digit of each report you wish to enable.
- To disable a report, place a 0 in the reporting digit.
- To send the MAN number along with open, close, or partial close reports, place an 'F' (*5) in the extended digit.

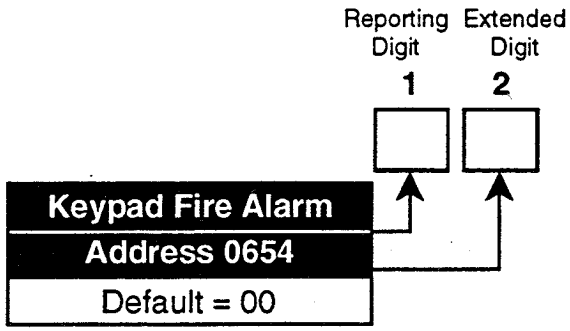

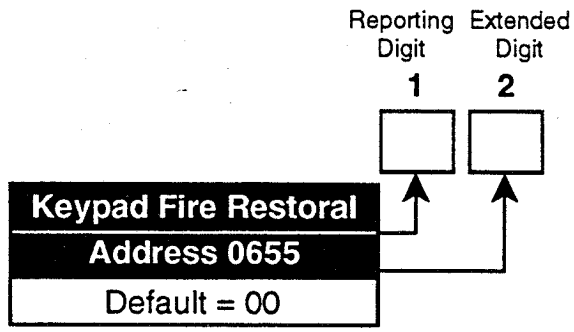

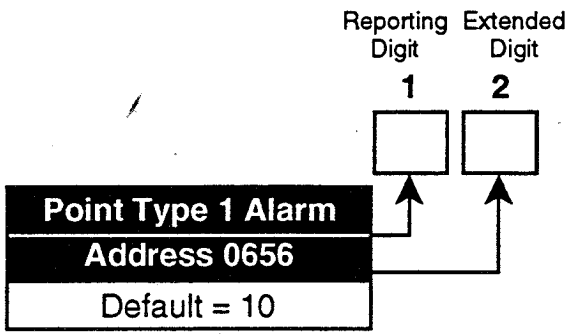

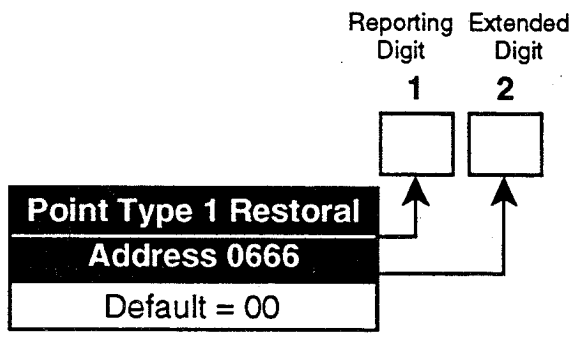

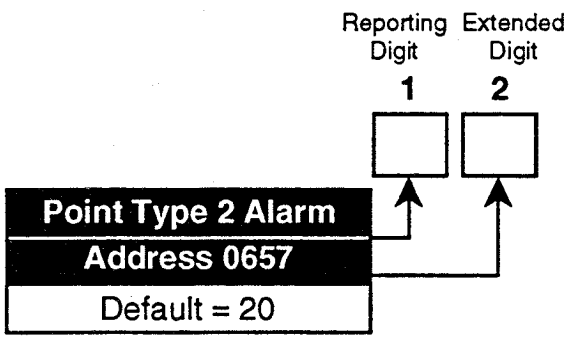

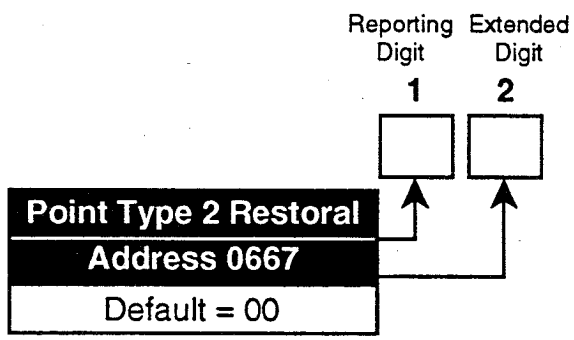

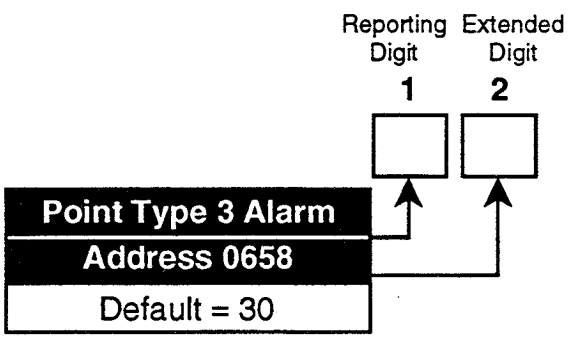

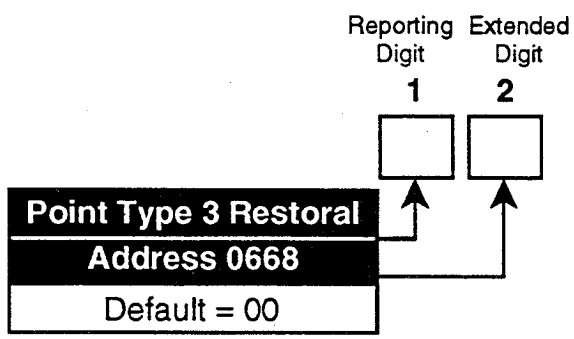

Copyright © 1993

Programming the DS7400

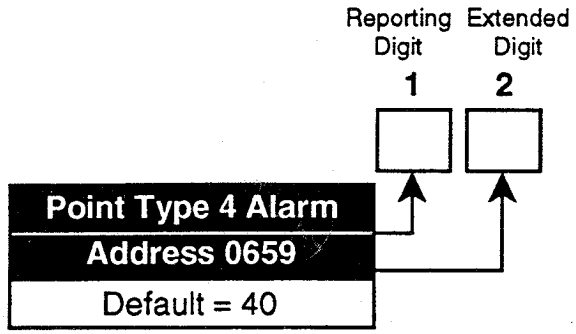

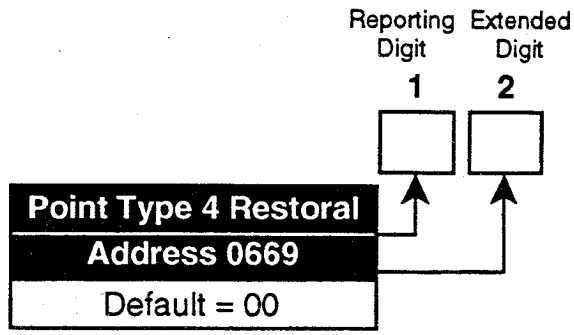

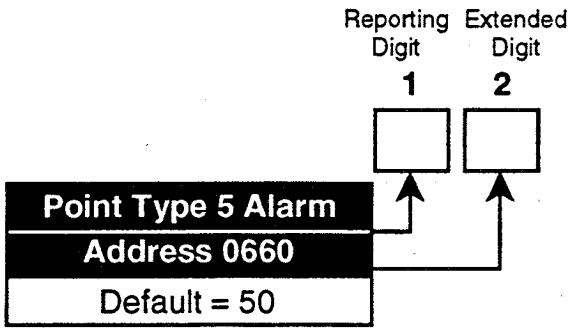

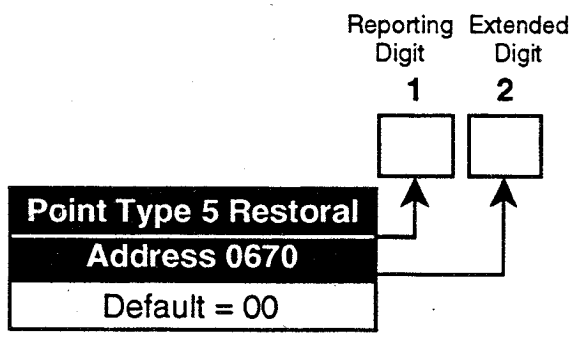

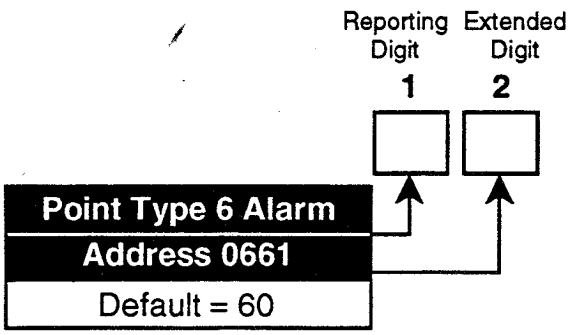

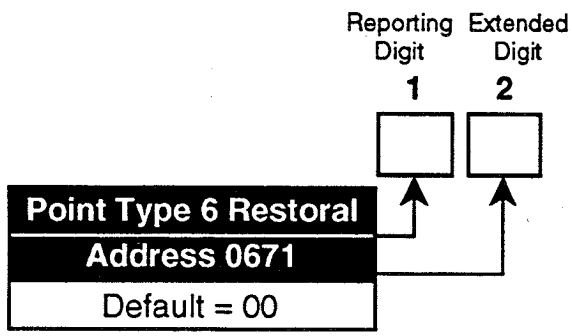

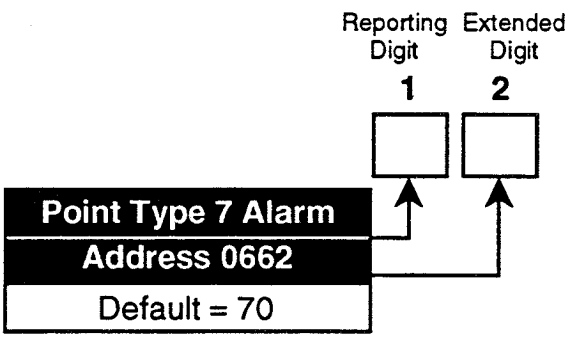

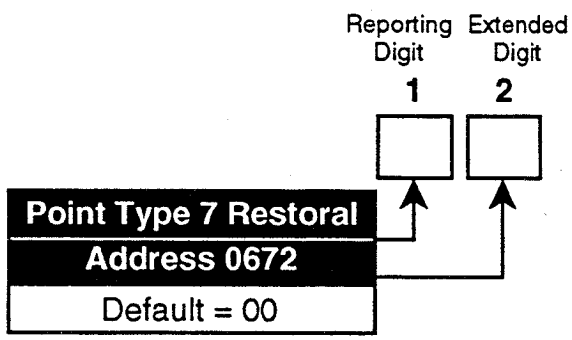

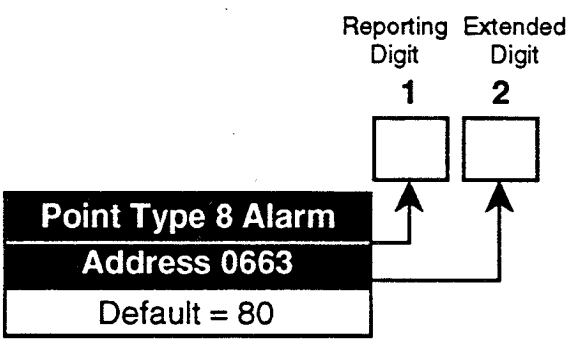

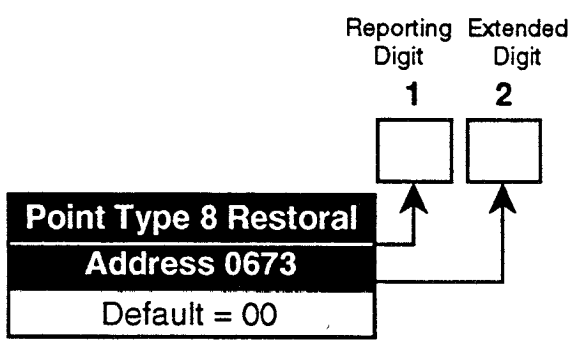

Copyright © 1993

Programming the DS7400

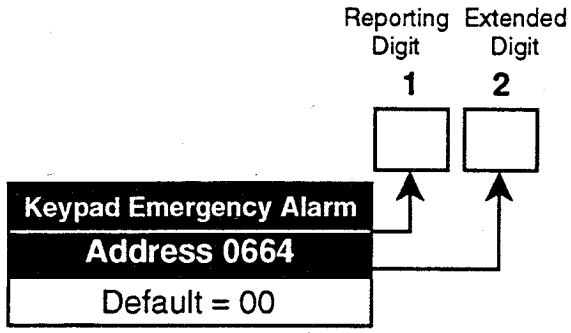

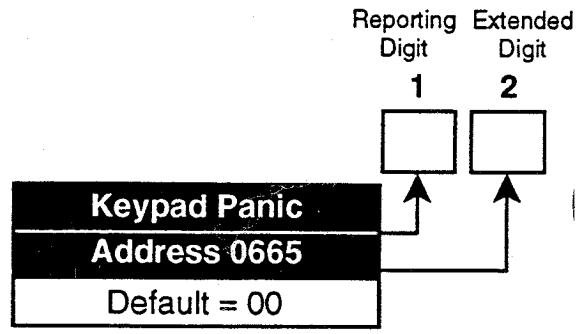

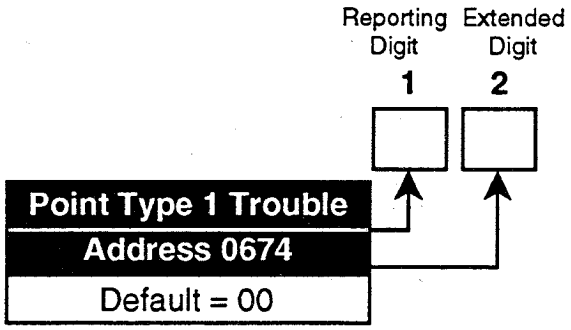

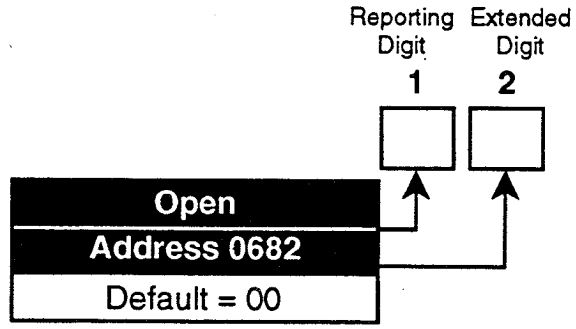

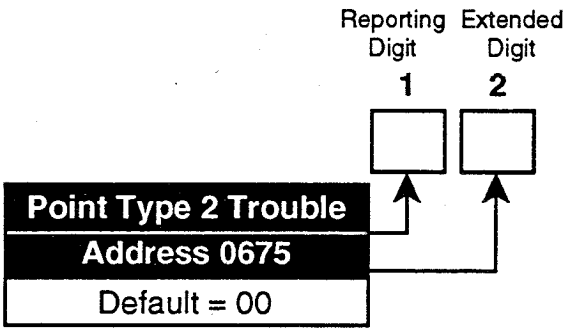

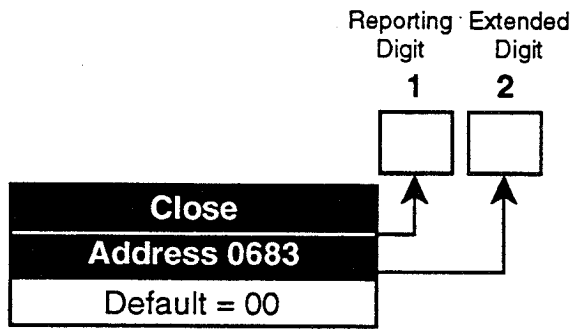

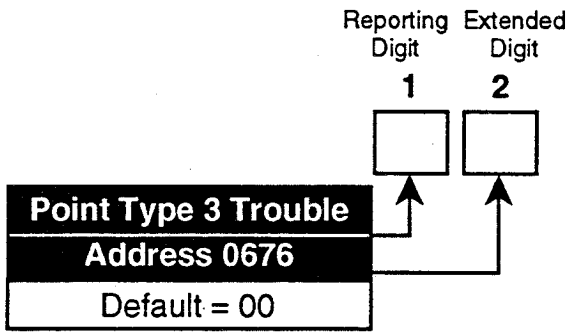

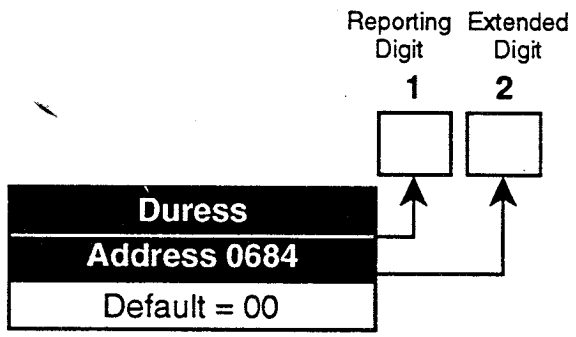

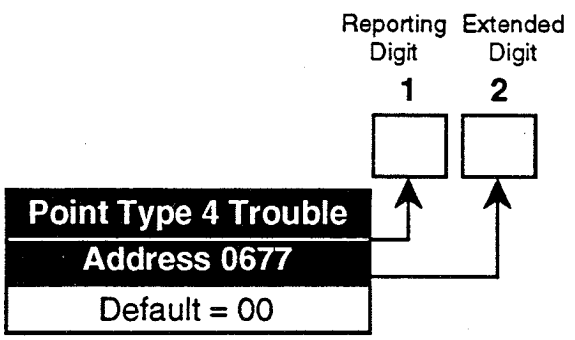

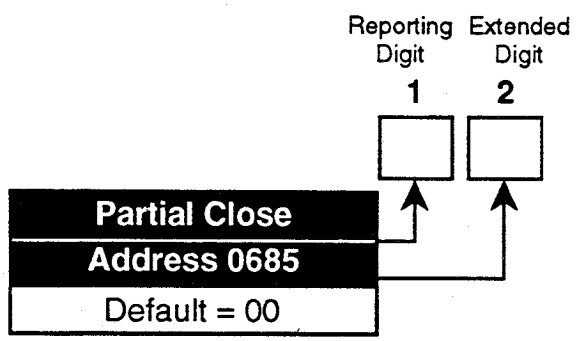

Copyright © 1993

Programming the DS7400

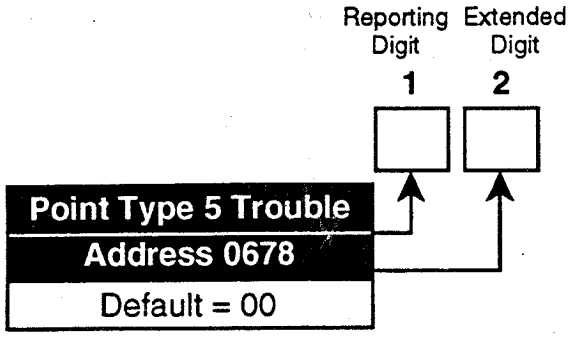

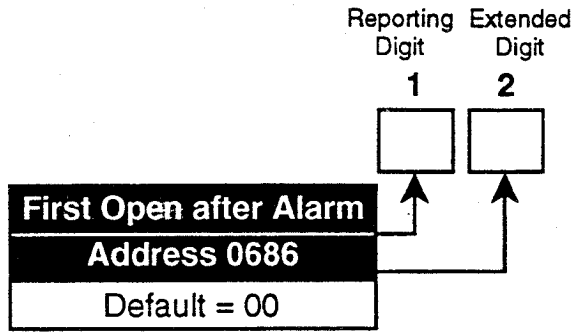

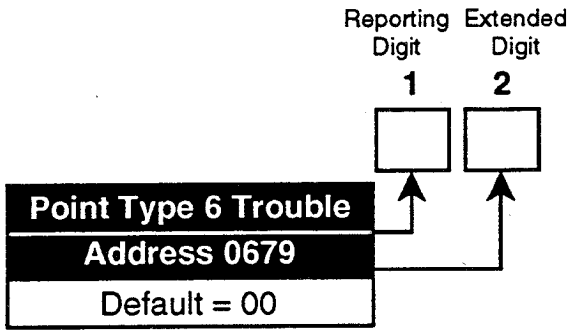

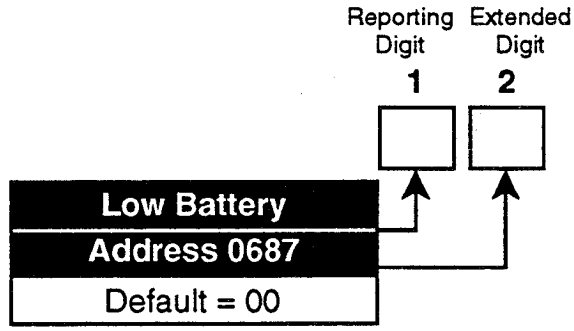

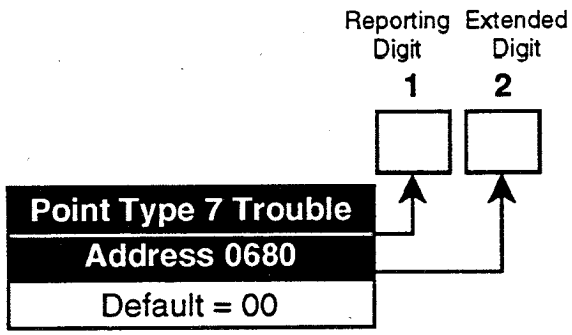

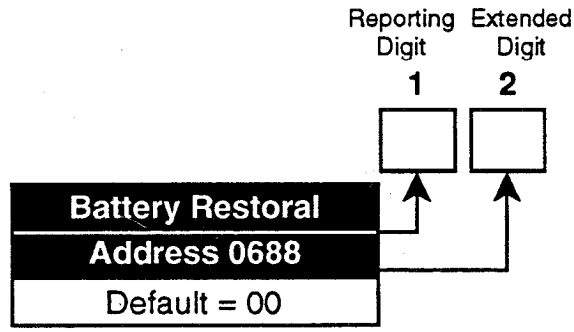

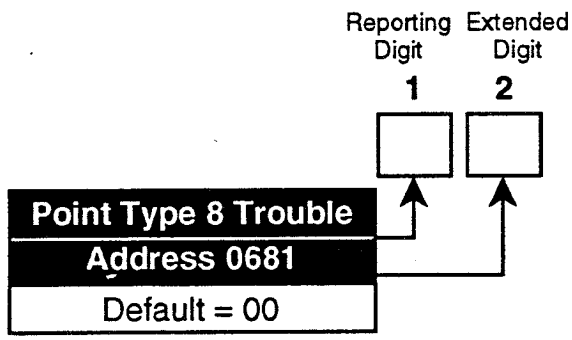

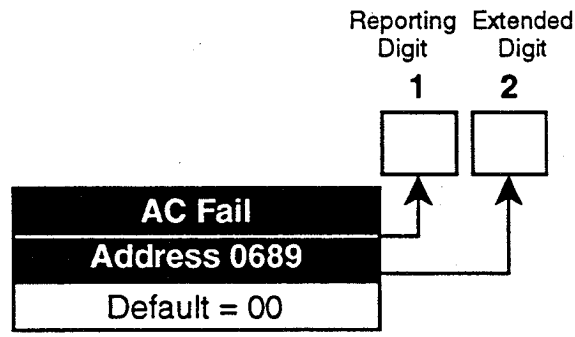

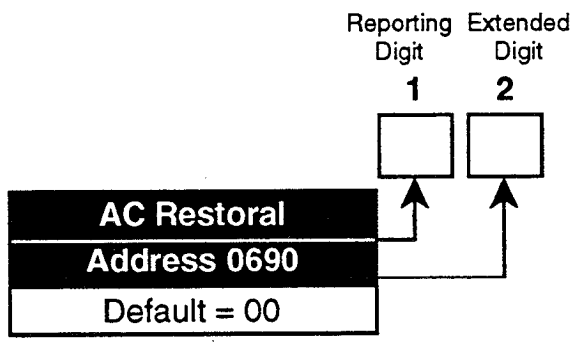

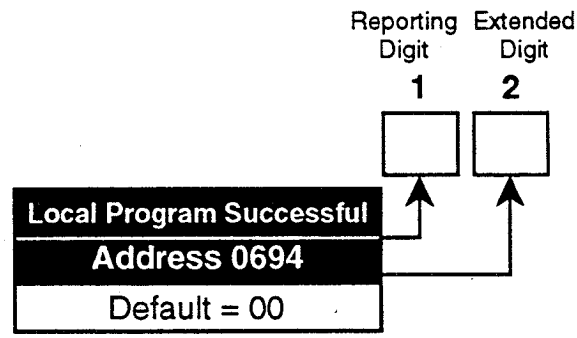

Copyright © 1993

Programming the DS7400

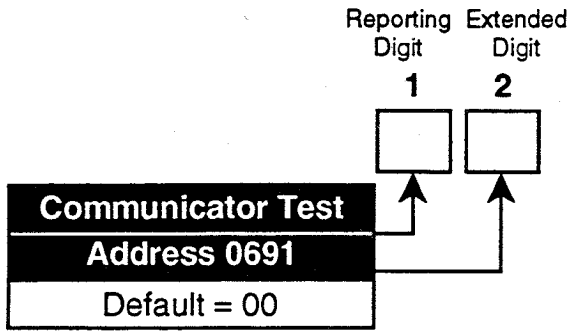

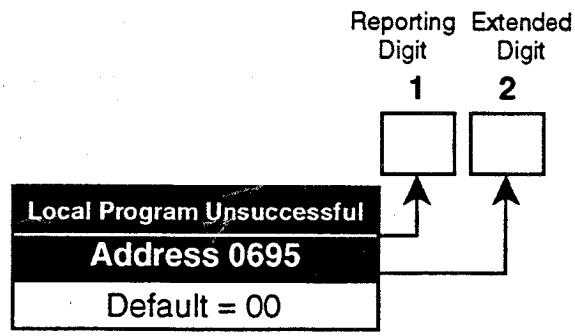

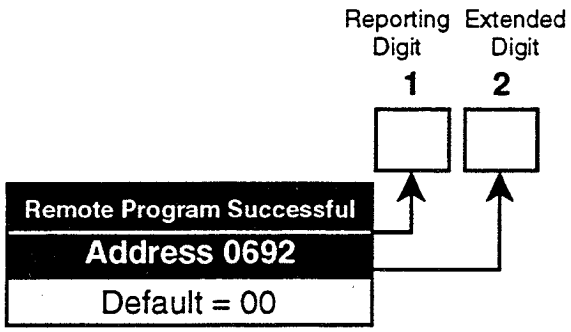

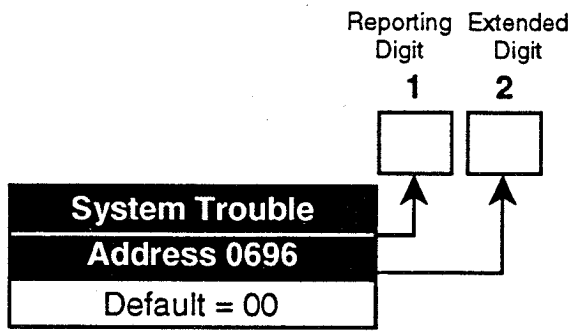

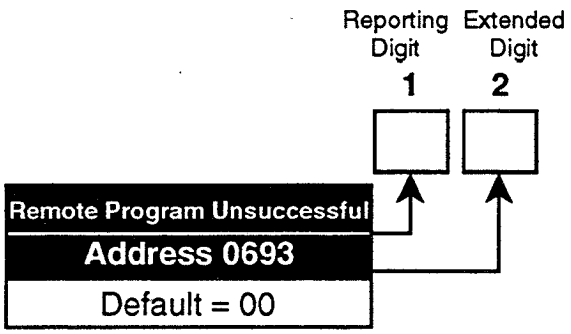

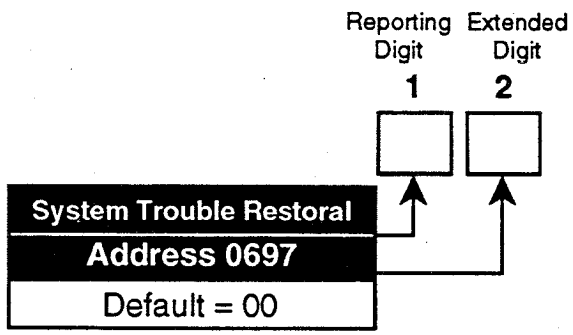

Copyright © 1993

Programming the DS7400

Phone Number Format Programming: Program Address (0712-0713)

Note:
Phone Number 1 Format = Address 0712
Phone Number 2 Format = Address 0713

Data Digit
1 2

Select Option	DD
Phone Number Disabled	0
3/1 (no Extended Reporting)	1
3/1E (Extended Reporting)	2
3/1 with Parity	3
3/1E with Parity	4
4/1	5
4/2	6
BFSK	7
SIA	8
Contact ID	9

	Enter the DD as a:					
Select Options	0	1	2	3	4	5
1900Hz Data/1400Hz Acknowledge	●		●		●	
1800Hz Data/2300Hz Acknowledge		●		●		●
BFSK, SIA, Contact ID		●				
10 Pulses per Second (PPS)	●	●				
20 Pulses per Second (PPS)			●	●		
40 Pulses per Second (PPS)					●	●

Copyright © 1993

Programming the DS7400

Account Code Programming: Program Address (0704-0710)

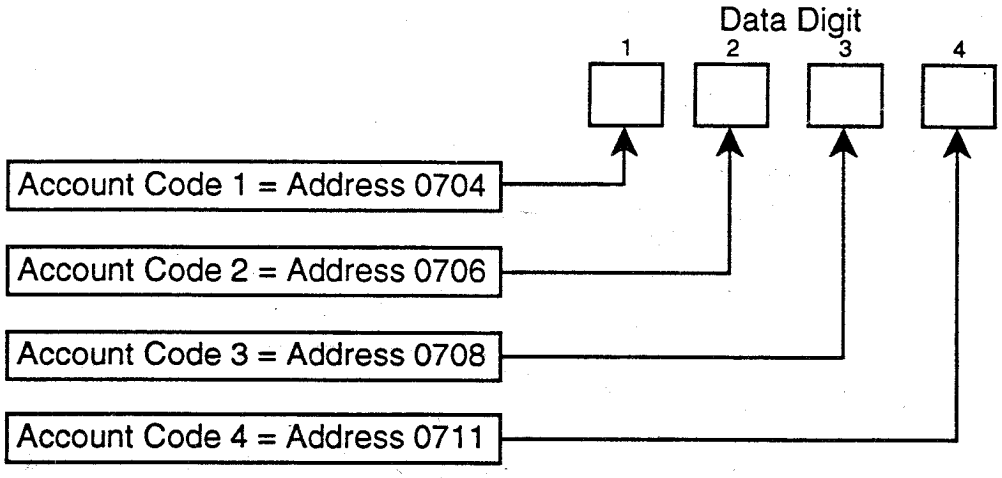

The Default for all Account Codes = 0000

Note:

1. Account codes are programmed from left to right. If programming a 3 digit account code, the fourth digit of this address must be "0."
   For example: If the account code is 123, program 1230 in the programming address.

2. If you wish to send a zero "0", enter it as *0.
   For example, if the account code is 101, program 1*010 in the programming address.

3. When using multiple partitions, the account codes have special relationships to the partitions used.
   The chart below explains these relationships:

Account Number	Using 1 Partition	Using 2 Partitions	Using 3 Partitions	Using 4 Partitions
1	Partition 1 reports Using Phone #1	Partition 1 reports Using Phone #1	Partition 1 reports	Partition 1 reports
2	Partition 1 reports Using Phone #2	Partition 1 reports Using Phone #2	Partition 2 reports	Partition 2 reports
3	Not Used	Partition 2 reports Using Phone #1	Partition 3 reports	Partition 3 reports
4	Not Used	Partition 2 reports Using Phone #2	Not Used	Partition 4 reports

Copyright © 1993

Programming the DS7400

Programmer's Code Programming: Program Address (0714)

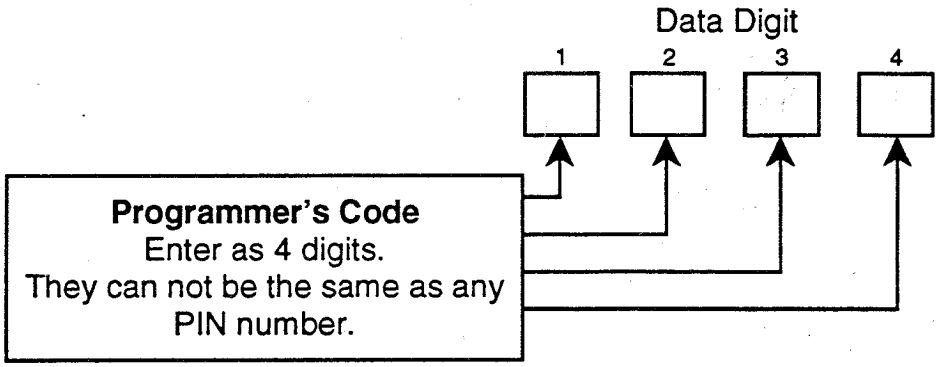

The Default for the Programmer's Code = 9876

Copyright © 1993

Programming the DS7400

Master Code and and Authority Programming: Program Addresses (0716 and 836)

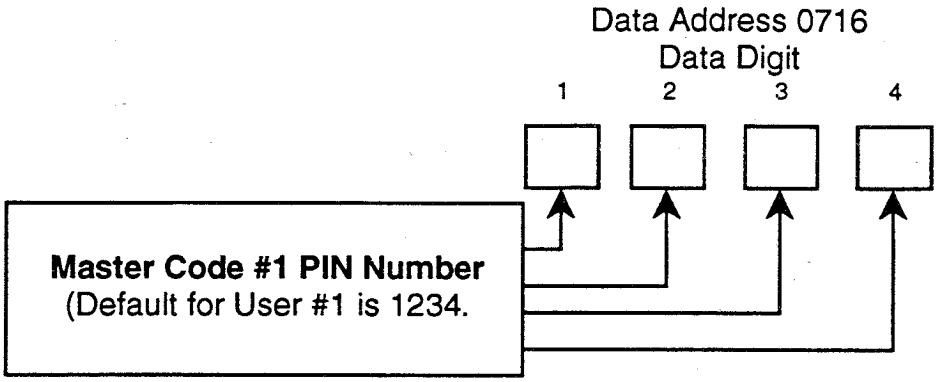

If the Master Code is lost, this address may be used to program a new one. Otherwise, the Master Code Programming Mode should be used.

Master Code #1 Authority is fixed at level 0. It will always have access to all partitions.

Copyright © 1993

Programming the DS7400

Octal Relay Module Output (DS7488) Programming: Program Addresses (0866-0873)

Select Option	DD
Latch ON after Point Alarm	0
ON during Entry Pre-Alert	1
ON for 10 sec. after #80 in entered	2
ON when System is Armed	3
Ground Start	4
System Status (Ready to Arm)	5
Point Alarm	6
Point Alarm delayed by 10 sec.	7
Keypad Sounder Output	8
Access Output (10 sec. pulse)	9

Data Digit
1 2

	Enter the Data Digit as a:															
Follows	0	1	2	3	4	5	6	7	8	9	*0	*1	*2	*3	*4	*5
Partition 1		●	●	●										●	●	●
Partition 2					●	●	●							●	●	●
Partition 3								●	●	●				●	●	●
Partition 4											●	●	●	●	●	●
Burglar Alarm		●		●	●		●	●		●	●		●	●		●
Fire Alarm			●	●		●	●		●	●		●	●		●	●

OR

Select Option	DD
Disabled	0
AC Power Fail	1
Low Battery	2
Communicator Failure	3
System Fault (Any)	4
Keypad Supervision Fault	5
Multiplex Bus Fault	6
Radio Receiver Fault	7
Aux Power Fault	8
Fire Trouble	9
Point Trouble	*1
Duress	*2

Follow System Status Event | *2

Data Digit
1 2

Octal Relay Output	Address
1	0866
2	0867
3	0868
4	0869
5	0870
6	0871
7	0872
8	0873

Copyright © 1993

Programming the DS7400

Call-Out Timer Programming: Program Addresses (1975-1978)

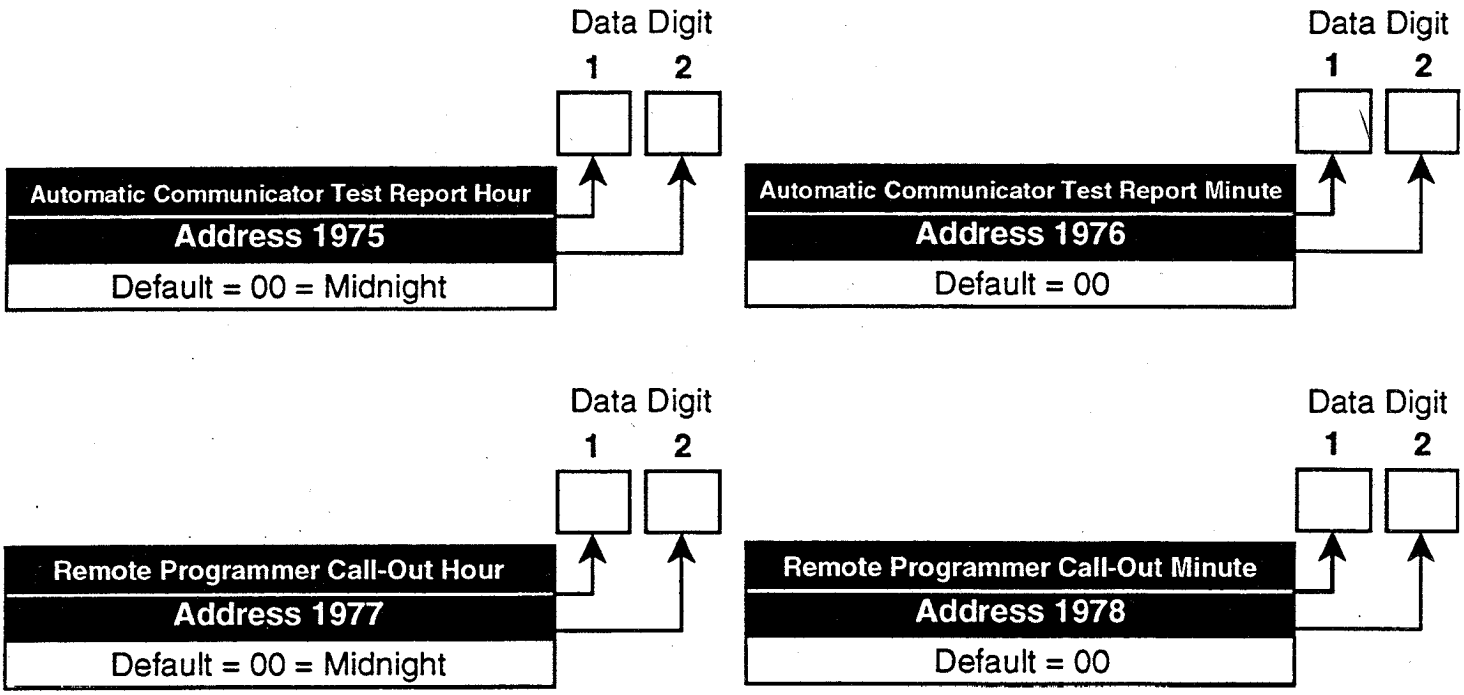

Copyright © 1993

Programming the DS7400

Test Report and Remote Programmer Call-Out Programming: Program Address (1979)

Data Digit
1 2

Select Option	DD
Do not send a Test Report	0
Send a Test Report on Sunday	1
Send a Test Report on Monday	2
Send a Test Report on Tuesday	3
Send a Test Report on Wednesday	4
Send a Test Report on Thursday	5
Send a Test Report on Friday	6
Send a Test Report on Saturday	7
Send a Test Report every day	8
Send a Test Report every 8 days	9
Send a Test Report every 28 days	*0
Send a Test Report every hour	*1
Send a Test Report every 12 hours	*2

Select Option	DD
Do not call the Remote Programmer	0
Call the Remote Programmer on Sunday	1
Call the Remote Programmer on Monday	2
Call the Remote Programmer on Tuesday	3
Call the Remote Programmer on Wednesday	4
Call the Remote Programmer on Thursday	5
Call the Remote Programmer on Friday	6
Call the Remote Programmer on Saturday	7
Call the Remote Programmer every day	8
Call the Remote Programmer every 8 days	9
Call the Remote Programmer every 28 days	*0
Call the Remote Programmer on Sunday	*1
Call the Remote Programmer on Sunday	*2

Copyright © 1993

Programming the DS7400

Phone Number 1 Programming: Program Address (1980)

1	2	3	4	5	6	7	8	9	10	11	12	13	14	15	16	17	18	19	20

Phone Number 2 Programming: Program Address (1990)

1	2	3	4	5	6	7	8	9	10	11	12	13	14	15	16	17	18	19	20

Phone Number 3 (Remote Programmer) Programming: Program Address (2000)

1	2	3	4	5	6	7	8	9	10	11	12	13	14	15	16	17	18	19	20

Enter the Phone Number digits just as they would be entered when dialing the phone.

Note:
To input a three second delay, enter *3 (D).
To disable a Phone Number, enter *5 (F) in the first digit.

Copyright © 1993

DS7400 Installation Guide for U.L. Certificated Installations

The DS7400 is U.L. Listed for Household Fire Alarm, Household Burglary Alarm, Local Burglary Alarm Grade A, Police Station Connection grade A, and Central Station Burglary Alarm grades AA, A, B, and C. The DS7400 should be installed in accordance with U.L. 681, Installation and Classification of Mercantile and Bank Burglar Alarm Systems, or U.L. 1641, Installation and Classification of Residential Burglar Alarm Systems.

INSTALLATION CONSIDERATIONS

- Failure to install and program the DS7400 Control in accordance with the requirements in this section voids the listing mark of Underwriters Laboratories, Inc.
- The maximum standby battery capacity is 14A-h @ 12VDC.
- The total nominal standby current must not exceed 1.5A, and 2.5A when in alarm.
- The DS7400 control must be mounted indoors and within the protected area.
- Enclosure tamper switches (if used) must be connected to a 24 hour point.
- For commercial grade installations, wiring to the bell (if used) must be in conduit with no other wiring.
- For commercial grade installations requiring a bell and bell housing, the bell circuit must be made and supervised by means of metallic conductors to two ground clamps spaced at least 1/4 inch apart.
- Grounding must be to a cold water pipe where possible.
- At least one UL listed keypad with zone display must be connected.
- Zones must be connected to U.L. Listed, compatible devices.
- 50 Hz AC input cannot be used in U.L. certificated installations.
- The ground wire provided with the enclosure must be connected between the "GND" connection on the DS7400 board and the enclosure tab.
- The U.L. Listed compatible digital alarm communicator receivers (if used) are the Ademco model 685, the F.B.I. model CP-220, the I.T.I. model CS-4000, the Osborne-Hoffman model II, the Radionics models 6000 and 6500, the Sikent Knight model 9000, and the Varitech model V-300.

PROGRAMMING THE DS7400

When used in U.L. certificated installations, the DS7400 must conform to certain programming requirements. The following is a list of the required program entries and required accessories for specific U.L. certificated installations.

1. Household Fire Alarm using Digital Alarm Communicator Transmitter with local bell

The DS7400 must be installed in accordance with NFPA 74, and the U.L. 985 standard.

Required Accessories: At least one Detection Systems, Inc. Model DS200-2W (2 wire), or DS200-4W (4 wire) smoke detector, and one Wheelock 46T-G10-12 bell or 34T-12 horn (will provide 85db for UL 985 and NFPA 74 requirements; other listed compatible devices with a voltage range of 12 to 13.8V may be used) is required for this application and it must be installed inside the protected area. The standard DS7400 enclosure can be used. At least one DS7440 Keypad must be used. The 4-wire detector must be used with the Listed Detection Systems' EOL relay. All zones must be used with the EOL resistor (P/N 25899).

A. Report Programming:
- Fire Zone Report must be programmed.
- Low Battery Report must be programmed.
- AC Failure Report must be programmed.

B. Timer Programming:
- Bell Cutoff Time must be programmed for not less than 4 minutes.
- Dialer Delay must be programmed for not longer than 15 seconds.

C. Point Type Programming:
- The fire alarm output signal (whether pulsed or steady) must be different from the Burglar alarm signal.

 Copyright © 1993

DS7400 Installation Guide for U.L. Certificated Installations

D. Alarm Output Programming:
- Data address 0008 must be programmed as: Data Digit 1=0, Data Digit 2=*5.

2. Grade A Household Burglary Alarm using Digital Alarm Communicator Transmitter with local bell

The DS7400 must be installed in accordance with the U.L. 1641, and 1023 standards.

Required Accessories: At least one Wheelock 46T-G10-12 bell or 34T-12 horn (other listed compatible devices with a voltage range of 12 to 13.8V may be used) is required for this application. The standard DS7400 enclosure can be used.

A. General Control Programming:
- Points must be programmed for "Will Restore".

B. Report Programming:
- Burglar Zone Reports must be programmed for those zones used.
- Low Battery Report (Program Address 0687) must be programmed.
- AC Failure Report (Program Address 0689) must be programmed.

C. Timer Programming:
- Bell Cutoff Times (Program Addresses 0641 and 0642) must be programmed for not less than 4 minutes.
- Exit Delay Timer (Program Addresses 0638 and 0640) must be programmed for not longer than 60 seconds.
- Entry Delay Timer (Program Address 0639) must be programmed for not longer than 45 seconds.

D. General Control Programming:
- Residential or Commercial Mode (Program Address 0011, Data Digit 2) must be programmed for NO Swinger Shunts (enter 0, 1, or 2).

E. Alarm Output Programming:
- Data address 0008 must be programmed as: Data Digit 1=0, Data Digit 2=*5.

NOTE: For combination fire and burglary alarm applications, the DS7400 must be programmed to pulse the bell for a fire alarm (Point Type programming Addresses 0000-0007, Data Digit 1, enter 3, 7, *1, or *5), and produce a steady bell for a burglar alarm (Point Type programming Addresses 0000-0007, Data Digit 1, enter 2, 6, *0, or *4).

3. Local Burglary Alarm

The DS7400 must be installed in accordance with the U.L. 681, and 609 standards for all grades of service.

A. Grade A Installations using Digital Alarm Communicator Transmitter with local bell

Required Accessories: The Detection Systems' Model AE7400 Enclosure, the Ademco Model AD10-12 bell must be mounted in the Ademco Model AB-12 bell housing.

1. Report Programming:
- Burglar Zone Reports must be programmed for those zones used.
- Low Battery Report (Program Address 0687) must be programmed.
- AC Failure Report (Program Address 0689) must be programmed.
- Open Report (Program Address 0682) must be programmed.
- Close Report (Program Address 0683) must be programmed.
- 24 Hour Check-In Report (Program Address 0691) must be programmed.

2. Timer Programming:
- Bell Cutoff Times (Program Addresses 0641 and 0642) must be programmed for not less than 15 minutes.
- Exit, Entry Delay Times (Program Addresses 0638 and 0640) must be programmed for not longer than 60 seconds.

3. General Control Programming:
- Must be programmed for Commercial Mode and no swinger shunts (Program Address 0011 data digit 1, enter 1, 3, 4, 7, 9, *1, *3, or *5, data digit 2, enter 0, 1, or 2).

 Copyright © 1993

DS7400 Installation Guide for U.L. Certificated Installations

4. Point Type Programming:
   - The Burglar alarm output signal (whether pulsed or steady) must be different from the Fire alarm signal.
5. Alarm Output Programming:
   - Data address 0008 must be programmed as: Data Digit 1=0, Data Digit 2=*5.

4. Police Station Connection

The DS7400 must be installed in accordance with the U.L. 681, 365, and 1635 standards.

A. Grade A Installations using Digital Alarm Communicator Transmitter with local bell

Required Accessories: The DS7400 must be mounted with a cover actuated tamper switch installed in the Detection Systems AE7400 enclosure. The Ademco Model AD10-12 bell must be mounted in the Ademco Model AB-12 bell housing.

1. Report Programming:
   - Burglar Zone Reports must be programmed for those zones used.
   - Low Battery Report (Program Address 0687) must be programmed.
   - AC Failure Report (Program Address 0689) must be programmed.
   - Open Report (Program Address 0682) must be programmed.
   - Close Report (Program Address 0683) must be programmed.
   - 24 Hour Check-In Report (Program Address 0691) must be programmed.
2. Timer Programming:
   - Bell Cutoff Times (Program Addresses 0641 and 0642) must be programmed for not less than 15 minutes.
   - Exit, Entry Delay Times (Program Addresses 0638 and 0640) must be programmed for not longer than 60 seconds.
3. General Control Programming:
   - Must be programmed for Commercial Mode, NO swinger shunts, and closing ringback. (Program Address 0011 data digit 1, enter 5, 7, *3, or *5, data digit 2, enter 0, 1, or 2).
4. Point Type Programming:
   - The Burglar alarm output signal (whether pulsed or steady) must be different from the Fire alarm signal.
5. Alarm Output Programming:
   - Data address 0008 must be programmed as: Data Digit 1=0, Data Digit 2=*5.

5. Central Station Burglary Alarm

The DS7400 must be installed in accordance with the U.L. 681, 1610, and 1635 standards for all grades of service.

A. Grade B Installations using Digital Alarm Communicator Transmitter with local bell

Required Accessories: The DS7400 must be mounted in the Detection Systems' model AE7400 attack enclosure with a cover actuated tamper switch installed. The Ademco Model AD10-12 bell must be mounted in the Ademco Model AB-12 bell housing.

1. Report Programming:
   - Burglar Zone Reports must be programmed for those zones used.
   - Low Battery Report (Program Address 0687) must be programmed.
   - AC Failure Report (Program Address 0689) must be programmed.
   - Open Report (Program Address 0682) must be programmed.
   - Close Report (Program Address 0683) must be programmed.
   - 24 Hour Check-In Report (Program Address 0691) must be programmed.
2. Timer Programming:
   - Bell Cutoff Times (Program Addresses 0641 and 0642) must be programmed for not less than 15 minutes.
   - Exit, Entry Delay Times (Program Addresses 0638 and 0640) must be programmed for not longer than 60 seconds.

 Copyright © 1993

DS7400 Installation Guide for U.L. Certificated Installations

3. General Control Programming:
   - Must be programmed for Commercial Mode, NO swinger shunts, and closing ringback. (Program Address 0011 data digit 1, enter 5, 7, *3, or *5, data digit 2, enter 0, 1, or 2).
4. Point Type Programming:
   - The Burglar alarm output signal (whether pulsed or steady) must be different from the Fire alarm signal.
5. Alarm Output Programming:
   - Data address 0008 must be programmed as: Data Digit 1=0, Data Digit 2=*5.

B. Grade C Installations using Digital Alarm Communicator Transmitter only

Required Accessories: The DS7400 must be mounted in the AE7400 attack resistant enclosure (order DS7400CC) with a cover actuated tamper switch installed.

1. Report Programming:
   - Burglar Zone Reports must be programmed for those zones used.
   - Low Battery Report (Program Address 0687) must be programmed.
   - AC Failure Report (Program Address 0689) must be programmed.
   - Open Report (Program Address 0682) must be programmed.
   - Close Report (Program Address 0683) must be programmed.
   - 24 Hour Check-In Report (Program Address 0691) must be programmed.
2. Timer Programming:
   - Bell Cutoff Times (Program Addresses 0641 and 0642) must be programmed for not less than 15 minutes.
   - Exit, Entry Delay Times (Program Addresses 0638 and 0640) must be programmed for not longer than 60 seconds.
3. General Control Programming:
   - Must be programmed for Commercial Mode, NO swinger shunts, and closing ringback. (Program Address 0011 data digit 1, enter 5, 7, *3, or *5, data digit 2, enter 0, 1, or 2).
4. Point Type Programming:
   - The Burglar alarm output signal (whether pulsed or steady) must be different from the Fire alarm signal.
5. Alarm Output Programming:
   - Data address 0008 must be programmed as: Data Digit 1=0, Data Digit 2=*5.

 Copyright © 1993

Programming Addresses

PA	Value	Definition
0000-1		Point Type 1
0000-2		Point Type 1
0001-1		Point Type 2
0001-2		Point Type 2
0002-1		Point Type 3
0002-2		Point Type 3
0003-1		Point Type 4
0003-2		Point Type 4
0004-1		Point Type 5
0004-2		Point Type 5
0005-1		Point Type 6
0005-2		Point Type 6
0006-1		Point Type 7
0006-2		Point Type 7
0007-1		Point Type 8
0007-2		Point Type 8
0008-1		Alarm Output
0008-2		Alarm Output
0009-1		Programmable Output 1
0009-2		Programmable Output 1
0010-1		Programmable Output 2
0010-2		Programmable Output 2
0011-1		General Control
0011-2		Point restore
0012-1		Partition Control
0012-2		Partition Control
0013-1		Partition Control
0013-2		Partition Control
0014-1		Partition Control
0014-2		Partition Control
0015-1		Partition Control
0015-2		Partition Control
0016-1		Keypad 1
0016-2		Keypad 2
0017-1		Keypad 3
0017-2		Keypad 4
0018-1		Keypad 5
0018-2		Keypad 6
0019-1		Keypad 7
0019-2		Keypad 8
0022-1		Point 1 assignment
0022-2		Point 1 assignment
0023-1		Point 2 assignment
0023-2		Point 2 assignment
0024-1		Point 3 assignment
0024-2		Point 3 assignment
0025-1		Point 4 assignment
0025-2		Point 4 assignment
0026-1		Point 5 assignment
0026-2		Point 5 assignment
0027-1		Point 6 assignment
0027-2		Point 6 assignment
0028-1		Point 7 assignment
0028-2		Point 7 assignment

PA	Value	Definition
0029-1		Point 8 assignment
0029-2		Point 8 assignment
0030-1		Point 9 assignment
0030-2		Point 9 assignment
0031-1		Point 10 assignment
0031-2		Point 10 assignment
0032-1		Point 11 assignment
0032-2		Point 11 assignment
0033-1		Point 12 assignment
0033-2		Point 12 assignment
0034-1		Point 13 assignment
0034-2		Point 13 assignment
0035-1		Point 14 assignment
0035-2		Point 14 assignment
0036-1		Point 15 assignment
0036-2		Point 15 assignment
0037-1		Point 16 assignment
0037-2		Point 16 assignment
0038-1		Point 17 assignment
0038-2		Point 17 assignment
0039-1		Point 18 assignment
0039-2		Point 18 assignment
0040-1		Point 19 assignment
0040-2		Point 19 assignment
0041-1		Point 20 assignment
0041-2		Point 20 assignment
0042-1		Point 21 assignment
0042-2		Point 21 assignment
0043-1		Point 22 assignment
0043-2		Point 22 assignment
0044-1		Point 23 assignment
0044-2		Point 23 assignment
0045-1		Point 24 assignment
0045-2		Point 24 assignment
0046-1		Point 25 assignment
0046-2		Point 25 assignment
0047-1		Point 26 assignment
0047-2		Point 26 assignment
0048-1		Point 27 assignment
0048-2		Point 27 assignment
0049-1		Point 28 assignment
0049-2		Point 28 assignment
0050-1		Point 29 assignment
0050-2		Point 29 assignment
0051-1		Point 30 assignment
0051-2		Point 30 assignment
0052-1		Point 31 assignment
0052-2		Point 31 assignment
0053-1		Point 32 assignment
0053-2		Point 32 assignment
0054-1		Point 33 assignment
0054-2		Point 33 assignment
0055-1		Point 34 assignment
0055-2		Point 34 assignment

 Copyright © 1993

Programming Addresses

PA	Value	Definition
0056-1		Point 35 assignment
0056-2		Point 35 assignment
0057-1		Point 36 assignment
0057-2		Point 36 assignment
0058-1		Point 37 assignment
0058-2		Point 37 assignment
0059-1		Point 38 assignment
0059-2		Point 38 assignment
0060-1		Point 39 assignment
0060-2		Point 39 assignment
0061-1		Point 40 assignment
0061-2		Point 40 assignment
0062-1		Point 41 assignment
0062-2		Point 41 assignment
0063-1		Point 42 assignment
0063-2		Point 42 assignment
0064-1		Point 43 assignment
0064-2		Point 43 assignment
0065-1		Point 44 assignment
0065-2		Point 44 assignment
0066-1		Point 45 assignment
0066-2		Point 45 assignment
0067-1		Point 46 assignment
0067-2		Point 46 assignment
0068-1		Point 47 assignment
0068-2		Point 47 assignment
0069-1		Point 48 assignment
0069-2		Point 48 assignment
0070-1		Point 49 assignment
0070-2		Point 49 assignment
0071-1		Point 50 assignment
0071-2		Point 50 assignment
0072-1		Point 51 assignment
0072-2		Point 51 assignment
0073-1		Point 52 assignment
0073-2		Point 52 assignment
0074-1		Point 53 assignment
0074-2		Point 53 assignment
0075-1		Point 54 assignment
0075-2		Point 54 assignment
0076-1		Point 55 assignment
0076-2		Point 55 assignment
0077-1		Point 56 assignment
0077-2		Point 56 assignment
0078-1		Point 57 assignment
0078-2		Point 57 assignment
0079-1		Point 58 assignment
0079-2		Point 58 assignment
0080-1		Point 59 assignment
0080-2		Point 59 assignment
0081-1		Point 60 assignment
0081-2		Point 60 assignment
0082-1		Point 61 assignment
0082-2		Point 61 assignment

PA	Value	Definition
0083-1		Point 62 assignment
0083-2		Point 62 assignment
0084-1		Point 63 assignment
0084-2		Point 63 assignment
0085-1		Point 64 assignment
0085-2		Point 64 assignment
0150-1		Alpha for point 1
0150-2		Alpha for point 1
0151-1		Alpha for point 1
0151-2		Alpha for point 1
0152-1		Alpha for point 1
0152-2		Alpha for point 1
0153-1		Alpha for point 2
0153-2		Alpha for point 2
0154-1		Alpha for point 2
0154-2		Alpha for point 2
0155-1		Alpha for point 2
0155-2		Alpha for point 2
0156-1		Alpha for point 3
0156-2		Alpha for point 3
0157-1		Alpha for point 3
0157-2		Alpha for point 3
0158-1		Alpha for point 3
0158-2		Alpha for point 3
0159-1		Alpha for point 4
0159-2		Alpha for point 4
0160-1		Alpha for point 4
0160-2		Alpha for point 4
0161-1		Alpha for point 4
0161-2		Alpha for point 4
0162-1		Alpha for point 5
0162-2		Alpha for point 5
0163-1		Alpha for point 5
0163-2		Alpha for point 5
0164-1		Alpha for point 5
0164-2		Alpha for point 5
0165-1		Alpha for point 6
0165-2		Alpha for point 6
0166-1		Alpha for point 6
0166-2		Alpha for point 6
0167-1		Alpha for point 6
0167-2		Alpha for point 6
0168-1		Alpha for point 7
0168-2		Alpha for point 7
0169-1		Alpha for point 7
0169-2		Alpha for point 7
0170-1		Alpha for point 7
0170-2		Alpha for point 7
0171-1		Alpha for point 8
0171-2		Alpha for point 8
0172-1		Alpha for point 8
0172-2		Alpha for point 8
0173-1		Alpha for point 8
0173-2		Alpha for point 8

 Copyright © 1993

Programming Addresses

PA	Value	Definition
0174-1		Alpha for point 9
0174-2		Alpha for point 9
0175-1		Alpha for point 9
0175-2		Alpha for point 9
0176-1		Alpha for point 9
0176-2		Alpha for point 9
0177-1		Alpha for point 10
0177-2		Alpha for point 10
0178-1		Alpha for point 10
0178-2		Alpha for point 10
0179-1		Alpha for point 10
0179-2		Alpha for point 10
0180-1		Alpha for point 11
0180-2		Alpha for point 11
0181-1		Alpha for point 11
0181-2		Alpha for point 11
0182-1		Alpha for point 11
0182-2		Alpha for point 11
0183-1		Alpha for point 12
0183-2		Alpha for point 12
0184-1		Alpha for point 12
0184-2		Alpha for point 12
0185-1		Alpha for point 12
0185-2		Alpha for point 12
0186-1		Alpha for point 13
0186-2		Alpha for point 13
0187-1		Alpha for point 13
0187-2		Alpha for point 13
0188-1		Alpha for point 13
0188-2		Alpha for point 13
0189-1		Alpha for point 14
0189-2		Alpha for point 14
0190-1		Alpha for point 14
0190-2		Alpha for point 14
0191-1		Alpha for point 14
0191-2		Alpha for point 14
0192-1		Alpha for point 15
0192-2		Alpha for point 15
0193-1		Alpha for point 15
0193-2		Alpha for point 15
0194-1		Alpha for point 15
0194-2		Alpha for point 15
0195-1		Alpha for point 16
0195-2		Alpha for point 16
0196-1		Alpha for point 16
0196-2		Alpha for point 16
0197-1		Alpha for point 16
0197-2		Alpha for point 16
0198-1		Alpha for point 17
0198-2		Alpha for point 17
0199-1		Alpha for point 17
0199-2		Alpha for point 17
0200-1		Alpha for point 17
0200-2		Alpha for point 17

PA	Value	Definition
0201-1		Alpha for point 18
0201-2		Alpha for point 18
0202-1		Alpha for point 18
0202-2		Alpha for point 18
0203-1		Alpha for point 18
0203-2		Alpha for point 18
0204-1		Alpha for point 19
0204-2		Alpha for point 19
0205-1		Alpha for point 19
0205-2		Alpha for point 19
0206-1		Alpha for point 19
0206-2		Alpha for point 19
0207-1		Alpha for point 20
0207-2		Alpha for point 20
0208-1		Alpha for point 20
0208-2		Alpha for point 20
0209-1		Alpha for point 20
0209-2		Alpha for point 20
0210-1		Alpha for point 21
0210-2		Alpha for point 21
0211-1		Alpha for point 21
0211-2		Alpha for point 21
0212-1		Alpha for point 21
0212-2		Alpha for point 21
0213-1		Alpha for point 22
0213-2		Alpha for point 22
0214-1		Alpha for point 22
0214-2		Alpha for point 22
0215-1		Alpha for point 22
0215-2		Alpha for point 22
0216-1		Alpha for point 23
0216-2		Alpha for point 23
0217-1		Alpha for point 23
0217-2		Alpha for point 23
0218-1		Alpha for point 23
0218-2		Alpha for point 23
0219-1		Alpha for point 24
0219-2		Alpha for point 24
0220-1		Alpha for point 24
0220-2		Alpha for point 24
0221-1		Alpha for point 24
0221-2		Alpha for point 24
0222-1		Alpha for point 25
0222-2		Alpha for point 25
0223-1		Alpha for point 25
0223-2		Alpha for point 25
0224-1		Alpha for point 25
0224-2		Alpha for point 25
0225-1		Alpha for point 26
0225-2		Alpha for point 26
0226-1		Alpha for point 26
0226-2		Alpha for point 26
0227-1		Alpha for point 26
0227-2		Alpha for point 26

 Copyright © 1993

Programming Addresses

PA	Value	Definition
0228-1		Alpha for point 27
0228-2		Alpha for point 27
0229-1		Alpha for point 27
0229-2		Alpha for point 27
0230-1		Alpha for point 27
0230-2		Alpha for point 27
0231-1		Alpha for point 28
0231-2		Alpha for point 28
0232-1		Alpha for point 28
0232-2		Alpha for point 28
0233-1		Alpha for point 28
0233-2		Alpha for point 28
0234-1		Alpha for point 29
0234-2		Alpha for point 29
0235-1		Alpha for point 29
0235-2		Alpha for point 29
0236-1		Alpha for point 29
0236-2		Alpha for point 29
0237-1		Alpha for point 30
0237-2		Alpha for point 30
0238-1		Alpha for point 30
0238-2		Alpha for point 30
0239-1		Alpha for point 30
0239-2		Alpha for point 30
0240-1		Alpha for point 31
0240-2		Alpha for point 31
0241-1		Alpha for point 31
0241-2		Alpha for point 31
0242-1		Alpha for point 31
0242-2		Alpha for point 31
0243-1		Alpha for point 32
0243-2		Alpha for point 32
0244-1		Alpha for point 32
0244-2		Alpha for point 32
0245-1		Alpha for point 32
0245-2		Alpha for point 32
0246-1		Alpha for point 33
0246-2		Alpha for point 33
0247-1		Alpha for point 33
0247-2		Alpha for point 33
0248-1		Alpha for point 33
0248-2		Alpha for point 33
0249-1		Alpha for point 34
0249-2		Alpha for point 34
0250-1		Alpha for point 34
0250-2		Alpha for point 34
0251-1		Alpha for point 34
0251-2		Alpha for point 34
0252-1		Alpha for point 35
0252-2		Alpha for point 35
0253-1		Alpha for point 35
0253-2		Alpha for point 35
0254-1		Alpha for point 35
0254-2		Alpha for point 35

PA	Value	Definition
0255-1		Alpha for point 36
0255-2		Alpha for point 36
0256-1		Alpha for point 36
0256-2		Alpha for point 36
0257-1		Alpha for point 36
0257-2		Alpha for point 36
0258-1		Alpha for point 37
0258-2		Alpha for point 37
0259-1		Alpha for point 37
0259-2		Alpha for point 37
0260-1		Alpha for point 37
0260-2		Alpha for point 37
0261-1		Alpha for point 38
0261-2		Alpha for point 38
0262-1		Alpha for point 38
0262-2		Alpha for point 38
0263-1		Alpha for point 38
0263-2		Alpha for point 38
0264-1		Alpha for point 39
0264-2		Alpha for point 39
0265-1		Alpha for point 39
0265-2		Alpha for point 39
0266-1		Alpha for point 39
0266-2		Alpha for point 39
0267-1		Alpha for point 40
0267-2		Alpha for point 40
0268-1		Alpha for point 40
0268-2		Alpha for point 40
0269-1		Alpha for point 40
0269-2		Alpha for point 40
0270-1		Alpha for point 41
0270-2		Alpha for point 41
0271-1		Alpha for point 41
0271-2		Alpha for point 41
0272-1		Alpha for point 41
0272-2		Alpha for point 41
0273-1		Alpha for point 42
0273-2		Alpha for point 42
0274-1		Alpha for point 42
0274-2		Alpha for point 42
0275-1		Alpha for point 42
0275-2		Alpha for point 42
0276-1		Alpha for point 43
0276-2		Alpha for point 43
0277-1		Alpha for point 43
0277-2		Alpha for point 43
0278-1		Alpha for point 43
0278-2		Alpha for point 43
0279-1		Alpha for point 44
0279-2		Alpha for point 44
0280-1		Alpha for point 44
0280-2		Alpha for point 44
0281-1		Alpha for point 44
0281-2		Alpha for point 44

Copyright © 1993

Programming Addresses

PA	Value	Definition
0282-1		Alpha for point 45
0282-2		Alpha for point 45
0283-1		Alpha for point 45
0283-2		Alpha for point 45
0284-1		Alpha for point 45
0284-2		Alpha for point 45
0285-1		Alpha for point 46
0285-2		Alpha for point 46
0286-1		Alpha for point 46
0286-2		Alpha for point 46
0287-1		Alpha for point 46
0287-2		Alpha for point 46
0288-1		Alpha for point 47
0288-2		Alpha for point 47
0289-1		Alpha for point 47
0289-2		Alpha for point 47
0290-1		Alpha for point 47
0290-2		Alpha for point 47
0291-1		Alpha for point 48
0291-2		Alpha for point 48
0292-1		Alpha for point 48
0292-2		Alpha for point 48
0293-1		Alpha for point 48
0293-2		Alpha for point 48
0294-1		Alpha for point 49
0294-2		Alpha for point 49
0295-1		Alpha for point 49
0295-2		Alpha for point 49
0296-1		Alpha for point 49
0296-2		Alpha for point 49
0297-1		Alpha for point 50
0297-2		Alpha for point 50
0298-1		Alpha for point 50
0298-2		Alpha for point 50
0299-1		Alpha for point 50
0299-2		Alpha for point 50
0300-1		Alpha for point 51
0300-2		Alpha for point 51
0301-1		Alpha for point 51
0301-2		Alpha for point 51
0302-1		Alpha for point 51
0302-2		Alpha for point 51
0303-1		Alpha for point 52
0303-2		Alpha for point 52
0304-1		Alpha for point 52
0304-2		Alpha for point 52
0305-1		Alpha for point 52
0305-2		Alpha for point 52
0306-1		Alpha for point 53
0306-2		Alpha for point 53
0307-1		Alpha for point 53
0307-2		Alpha for point 53
0308-1		Alpha for point 53
0308-2		Alpha for point 53

PA	Value	Definition
0309-1		Alpha for point 54
0309-2		Alpha for point 54
0310-1		Alpha for point 54
0310-2		Alpha for point 54
0311-1		Alpha for point 54
0311-2		Alpha for point 54
0312-1		Alpha for point 55
0312-2		Alpha for point 55
0313-1		Alpha for point 55
0313-2		Alpha for point 55
0314-1		Alpha for point 55
0314-2		Alpha for point 55
0315-1		Alpha for point 56
0315-2		Alpha for point 56
0316-1		Alpha for point 56
0316-2		Alpha for point 56
0317-1		Alpha for point 56
0317-2		Alpha for point 56
0318-1		Alpha for point 57
0318-2		Alpha for point 57
0319-1		Alpha for point 57
0319-2		Alpha for point 57
0320-1		Alpha for point 57
0320-2		Alpha for point 57
0321-1		Alpha for point 58
0321-2		Alpha for point 58
0322-1		Alpha for point 58
0322-2		Alpha for point 58
0323-1		Alpha for point 58
0323-2		Alpha for point 58
0324-1		Alpha for point 59
0324-2		Alpha for point 59
0325-1		Alpha for point 59
0325-2		Alpha for point 59
0326-1		Alpha for point 59
0326-2		Alpha for point 59
0327-1		Alpha for point 60
0327-2		Alpha for point 60
0328-1		Alpha for point 60
0328-2		Alpha for point 60
0329-1		Alpha for point 60
0329-2		Alpha for point 60
0330-1		Alpha for point 61
0330-2		Alpha for point 61
0331-1		Alpha for point 61
0331-2		Alpha for point 61
0332-1		Alpha for point 61
0332-2		Alpha for point 61
0333-1		Alpha for point 62
0333-2		Alpha for point 62
0334-1		Alpha for point 62
0334-2		Alpha for point 62
0335-1		Alpha for point 62
0335-2		Alpha for point 62

 Copyright © 1993

Programming Addresses

PA	Value	Definition
0336-1		Alpha for point 63
0336-2		Alpha for point 63
0337-1		Alpha for point 63
0337-2		Alpha for point 63
0338-1		Alpha for point 63
0338-2		Alpha for point 63
0339-1		Alpha for point 64
0339-2		Alpha for point 64
0340-1		Alpha for point 64
0340-2		Alpha for point 64
0341-1		Alpha for point 64
0341-2		Alpha for point 64
0534-1		Alpha for Partition 1
0534-2		Alpha for Partition 1
0535-1		Alpha for Partition 1
0535-2		Alpha for Partition 1
0536-1		Alpha for Partition 1
0536-2		Alpha for Partition 1
0537-1		Alpha for Partition 2
0537-2		Alpha for Partition 2
0538-1		Alpha for Partition 2
0538-2		Alpha for Partition 2
0539-1		Alpha for Partition 2
0539-2		Alpha for Partition 2
0540-1		Alpha for Partition 3
0540-2		Alpha for Partition 3
0541-1		Alpha for Partition 3
0541-2		Alpha for Partition 3
0542-1		Alpha for Partition 3
0542-2		Alpha for Partition 3
0543-1		Alpha for Partition 4
0543-2		Alpha for Partition 4
0544-1		Alpha for Partition 4
0544-2		Alpha for Partition 4
0545-1		Alpha for Partition 4
0545-2		Alpha for Partition 4
0546-1		Custom Word 1
0546-2		Custom Word 1
0547-1		Custom Word 1
0547-2		Custom Word 1
0548-1		Custom Word 1
0548-2		Custom Word 1
0549-1		Custom Word 1
0549-2		Custom Word 1
0550-1		Custom Word 1
0550-2		Custom Word 1
0551-1		Custom Word 1
0551-2		Custom Word 1
0552-1		Custom Word 1
0552-2		Custom Word 1
0553-1		Custom Word 1
0553-2		Custom Word 1
0554-1		Custom Word 2
0554-2		Custom Word 2

PA	Value	Definition
0555-1		Custom Word 2
0555-2		Custom Word 2
0556-1		Custom Word 2
0556-2		Custom Word 2
0557-1		Custom Word 2
0557-2		Custom Word 2
0558-1		Custom Word 2
0558-2		Custom Word 2
0559-1		Custom Word 2
0559-2		Custom Word 2
0560-1		Custom Word 2
0560-2		Custom Word 2
0561-1		Custom Word 2
0561-2		Custom Word 2
0562-1		Custom Word 3
0562-2		Custom Word 3
0563-1		Custom Word 3
0563-2		Custom Word 3
0564-1		Custom Word 3
0564-2		Custom Word 3
0565-1		Custom Word 3
0565-2		Custom Word 3
0566-1		Custom Word 3
0566-2		Custom Word 3
0567-1		Custom Word 3
0567-2		Custom Word 3
0568-1		Custom Word 3
0568-2		Custom Word 3
0569-1		Custom Word 3
0569-2		Custom Word 3
0570-1		Custom Word 4
0570-2		Custom Word 4
0571-1		Custom Word 4
0571-2		Custom Word 4
0572-1		Custom Word 4
0572-2		Custom Word 4
0573-1		Custom Word 4
0573-2		Custom Word 4
0574-1		Custom Word 4
0574-2		Custom Word 4
0575-1		Custom Word 4
0575-2		Custom Word 4
0576-1		Custom Word 4
0576-2		Custom Word 4
0577-1		Custom Word 4
0577-2		Custom Word 4
0578-1		Custom Word 5
0578-2		Custom Word 5
0579-1		Custom Word 5
0579-2		Custom Word 5
0580-1		Custom Word 5
0580-2		Custom Word 5
0581-1		Custom Word 5
0581-2		Custom Word 5

 Copyright © 1993

Programming Addresses

PA	Value	Definition
0582-1		Custom Word 5
0582-2		Custom Word 5
0583-1		Custom Word 5
0583-2		Custom Word 5
0584-1		Custom Word 5
0584-2		Custom Word 5
0585-1		Custom Word 5
0585-2		Custom Word 5
0586-1		Custom Word 6
0586-2		Custom Word 6
0587-1		Custom Word 6
0587-2		Custom Word 6
0588-1		Custom Word 6
0588-2		Custom Word 6
0589-1		Custom Word 6
0589-2		Custom Word 6
0590-1		Custom Word 6
0590-2		Custom Word 6
0591-1		Custom Word 6
0591-2		Custom Word 6
0592-1		Custom Word 6
0592-2		Custom Word 6
0593-1		Custom Word 6
0593-2		Custom Word 6
0594-1		Custom Word 7
0594-2		Custom Word 7
0595-1		Custom Word 7
0595-2		Custom Word 7
0596-1		Custom Word 7
0596-2		Custom Word 7
0597-1		Custom Word 7
0597-2		Custom Word 7
0598-1		Custom Word 7
0598-2		Custom Word 7
0599-1		Custom Word 7
0599-2		Custom Word 7
0600-1		Custom Word 7
0600-2		Custom Word 7
0601-1		Custom Word 7
0601-2		Custom Word 7
0602-1		Custom Word 8
0602-2		Custom Word 8
0603-1		Custom Word 8
0603-2		Custom Word 8
0604-1		Custom Word 8
0604-2		Custom Word 8
0605-1		Custom Word 8
0605-2		Custom Word 8
0606-1		Custom Word 8
0606-2		Custom Word 8
0607-1		Custom Word 8
0607-2		Custom Word 8
0608-1		Custom Word 8
0608-2		Custom Word 8

PA	Value	Definition
0609-1		Custom Word 8
0609-2		Custom Word 8
0610-1		Custom Word 9
0610-2		Custom Word 9
0611-1		Custom Word 9
0611-2		Custom Word 9
0612-1		Custom Word 9
0612-2		Custom Word 9
0613-1		Custom Word 9
0613-2		Custom Word 9
0614-1		Custom Word 9
0614-2		Custom Word 9
0615-1		Custom Word 9
0615-2		Custom Word 9
0616-1		Custom Word 9
0616-2		Custom Word 9
0617-1		Custom Word 9
0617-2		Custom Word 9
0618-1		Custom Word 10
0618-2		Custom Word 10
0619-1		Custom Word 10
0619-2		Custom Word 10
0620-1		Custom Word 10
0620-2		Custom Word 10
0621-1		Custom Word 10
0621-2		Custom Word 10
0622-1		Custom Word 10
0622-2		Custom Word 10
0623-1		Custom Word 10
0623-2		Custom Word 10
0624-1		Custom Word 10
0624-2		Custom Word 10
0625-1		Custom Word 10
0625-2		Custom Word 10
0629-1		Commercial Fire
0629-2		Commercial Fire
0630-1		Keypad Fire
0630-2		Keypad Emergency
0631-1		Keypad Panic
0631-1	0	Must be 0
0632-1		Command 4 Arming
0632-2		Command 4 Arming
0633-1		Open/Close report control
0633-2		Open/Close report routing
0634-1		Pnt. alr, restore and trb rout
0634-2		System report routing
0635-1		Phone number gen control
0635-2		Phone number gen control
0636-1		Answer ring count (armed)
0636-2		Answer ring cnt. (disarmed)
0637-1		Max. points to force arm
0637-2	0	Must be 0
0638-1		Entry delay 1
0638-2		Entry delay 1

 Copyright © 1993

Programming Addresses

PA	Value	Definition
0639-1		Entry delay 2
0639-2		Entry delay 2
0640-1		Exit Delay
0640-2		Exit Delay
0641-1		Fire Alarm Cut off
0641-2		Fire Alarm Cut off
0642-1		Burg Alarm Cut off
0642-2		Burg Alarm Cut off
0654-1		Keypad Fire Report
0654-2		Keypad Fire Report ext.
0655-1		Keypad Fire Restore
0655-2		Keypad Fire Restore ext.
0656-1		Point Type 1 Alarm report
0656-2		Point Type 1 Alarm rpt. ext.
0657-1		Point Type 2 Alarm report
0657-2		Point Type 2 Alarm rpt. ext.
0658-1		Point Type 3 Alarm report
0658-2		Point Type 3 Alarm rpt. ext.
0659-1		Point Type 4 Alarm report
0659-2		Point Type 4 Alarm rpt. ext.
0660-1		Point Type 5 Alarm report
0660-2		Point Type 5 Alarm rpt. ext.
0661-1		Point Type 6 Alarm report
0661-2		Point Type 6 Alarm rpt. ext.
0662-1		Point Type 7 Alarm report
0662-2		Point Type 7 Alarm rpt. ext.
0663-1		Point Type 8 Alarm report
0663-2		Point Type 8 Alarm rpt. ext.
0664-1		Keypad Emergency Report
0664-2		Keypad Emergency Rpt. ext
0665-1		Keypad Panic Report
0665-2		Keypad Panic Report ext.
0666-1		Point Type Restore 1
0666-2		Point Type Restore 1 ext.
0667-1		Point Type Restore 2
0667-2		Point Type Restore 2 ext.
0668-1		Point Type Restore 3
0668-2		Point Type Restore 3 ext.
0669-1		Point Type Restore 4
0669-2		Point Type Restore 4 ext.
0670-1		Point Type Restore 5
0670-2		Point Type Restore 5 ext.
0671-1		Point Type Restore 6
0671-2		Point Type Restore 6 ext.
0672-1		Point Type Restore 7
0672-2		Point Type Restore 7 ext.
0673-1		Point Type Restore 8
0673-2		Point Type Restore 8 ext.
0674-1		Point Type 1 Trouble
0674-2		Point Type 1 Trouble ext.
0675-1		Point Type 2 Trouble
0675-2		Point Type 2 Trouble ext.
0676-1		Point Type 3 Trouble
0676-2		Point Type 3 Trouble ext.

PA	Value	Definition
0677-1		Point Type 4 Trouble
0677-2		Point Type 4 Trouble ext.
0678-1		Point Type 5 Trouble
0678-2		Point Type 5 Trouble ext.
0679-1		Point Type 6 Trouble
0679-2		Point Type 6 Trouble ext.
0680-1		Point Type 7 Trouble
0680-2		Point Type 7 Trouble ext.
0681-1		Point Type 8 Trouble
0681-2		Point Type 8 Trouble ext.
0682-1		Open Report
0682-2		Open Report extended
0683-1		Close Report
0683-2		Close Report extended
0684-1		Duress Report
0684-2		Duress Report extended
0685-1		Partial Close Report
0685-2		Partial Close Report extend
0686-1		1st open after alarm rpt
0686-2		1st open after alarm rpt. ext.
0687-1		Low battery Report
0687-2		Low Battery Report extend
0688-1		Battery restoral report
0688-2		Battery restoral report ext.
0689-1		AC Fail report
0689-2		AC Fail report extended
0690-1		AC Restore report
0690-2		AC Restore report extended
0691-1		Comm test report
0691-2		Comm test report ext.
0692-1		Remote program OK report
0692-2		Remote program OK extend
0693-1		RP not OK report
0693-2		RP not OK report extended
0694-1		Local program OK report
0694-2		Local program OK extend
0695-1		LP not OK report
0695-2		LP not OK report extended
0696-1		System Trouble report
0696-2		System Trouble report ext.
0697-1		System Trouble restore
0697-2		System Trouble restore ext.
0698-1		Late to Open report
0698-2		Late to Open report ext.
0699-1		Late to Close report
0699-2		Late to Close report ext.
0704-1		Account Code 1
0704-2		Account Code 1
0704-3		Account Code 1
0704-4		Account Code 1
0706-1		Account Code 2
0706-2		Account Code 2
0706-3		Account Code 2
0706-4		Account Code 2

 Copyright © 1993

Programming Addresses

PA	Value	Definition
0708-1		Account Code 3
0708-2		Account Code 3
0708-3		Account Code 3
0708-4		Account Code 3
0710-1		Account Code 4
0710-2		Account Code 4
0710-3		Account Code 4
0710-4		Account Code 4
0712-1		Phone #1 Format
0712-2		Phone #1 Format
0713-1		Phone #2 Format
0713-2		Phone #2 Format
0714-1		Programmer's Code
0714-2		Programmer's Code
0714-3		Programmer's Code
0714-4		Programmer's Code
0716-1		PIN # 1
0716-2		PIN # 1
0716-3		PIN # 1
0716-4		PIN # 1
0866-1		Octal Relay #1-1 - digit 1
0866-2		Octal Relay #1-1 - digit 2
0867-1		Octal Relay #1-2 - digit 1
0867-2		Octal Relay #1-2 - digit 2
0868-1		Octal Relay #1-3 - digit 1
0868-2		Octal Relay #1-3 - digit 2
0869-1		Octal Relay #1-4 - digit 1
0869-2		Octal Relay #1-4 - digit 2
0870-1		Octal Relay #1-5 - digit 1
0870-2		Octal Relay #1-5 - digit 2
0871-1		Octal Relay #1-6 - digit 1
0871-2		Octal Relay #1-6 - digit 2
0872-1		Octal Relay #1-7 - digit 1
0872-2		Octal Relay #1-7 - digit 2
0873-1		Octal Relay #1-8 - digit 1
0873-2		Octal Relay #1-8 - digit 2
0927-1		Bell/Phone Line Monitor
1975-1		Auto test report time Hour
1975-2		Auto test report time Hour
1976-1		Auto test report time Minute
1976-2		Auto test report time Minute
1977-1		Rem. Prog. callout Hour
1977-2		Rem. Prog. callout Hour
1978-1		Rem. Prog. callout Minute
1978-2		Rem. Prog. callout Minute
1979-1		Auto test report interval
1979-2		Rem. Prog. callout interval
1980-1		Phone number 1
1980-2		Phone number 1
1980-3		Phone number 1
1980-4		Phone number 1
1980-5		Phone number 1
1980-6		Phone number 1
1980-7		Phone number 1

PA	Value	Definition
1980-8		Phone number 1
1980-9		Phone number 1
1980-10		Phone number 1
1980-11		Phone number 1
1980-12		Phone number 1
1980-13		Phone number 1
1980-14		Phone number 1
1980-15		Phone number 1
1980-16		Phone number 1
1980-17		Phone number 1
1980-18		Phone number 1
1980-19		Phone number 1
1980-20		Phone number 1
1990-1		Phone number 2
1990-2		Phone number 2
1990-3		Phone number 2
1990-4		Phone number 2
1990-5		Phone number 2
1990-6		Phone number 2
1990-7		Phone number 2
1990-8		Phone number 2
1990-9		Phone number 2
1990-10		Phone number 2
1990-11		Phone number 2
1990-12		Phone number 2
1990-13		Phone number 2
1990-14		Phone number 2
1990-15		Phone number 2
1990-16		Phone number 2
1990-17		Phone number 2
1990-18		Phone number 2
1990-19		Phone number 2
1990-20		Phone number 2
2000-1		Phone number 3
2000-2		Phone number 3
2000-3		Phone number 3
2000-4		Phone number 3
2000-5		Phone number 3
2000-6		Phone number 3
2000-7		Phone number 3
2000-8		Phone number 3
2000-9		Phone number 3
2000-10		Phone number 3
2000-11		Phone number 3
2000-12		Phone number 3
2000-13		Phone number 3
2000-14		Phone number 3
2000-15		Phone number 3
2000-16		Phone number 3
2000-17		Phone number 3
2000-18		Phone number 3
2000-19		Phone number 3
2000-20		Phone number 3
2010-1		Default EEProm

Copyright © 1993

Programming Addresses

PA	Value	Definition	PA	Value	Definition
2010-2		Default EEProm			

Printed on recycled paper